3onedata
Make network communication more reliable

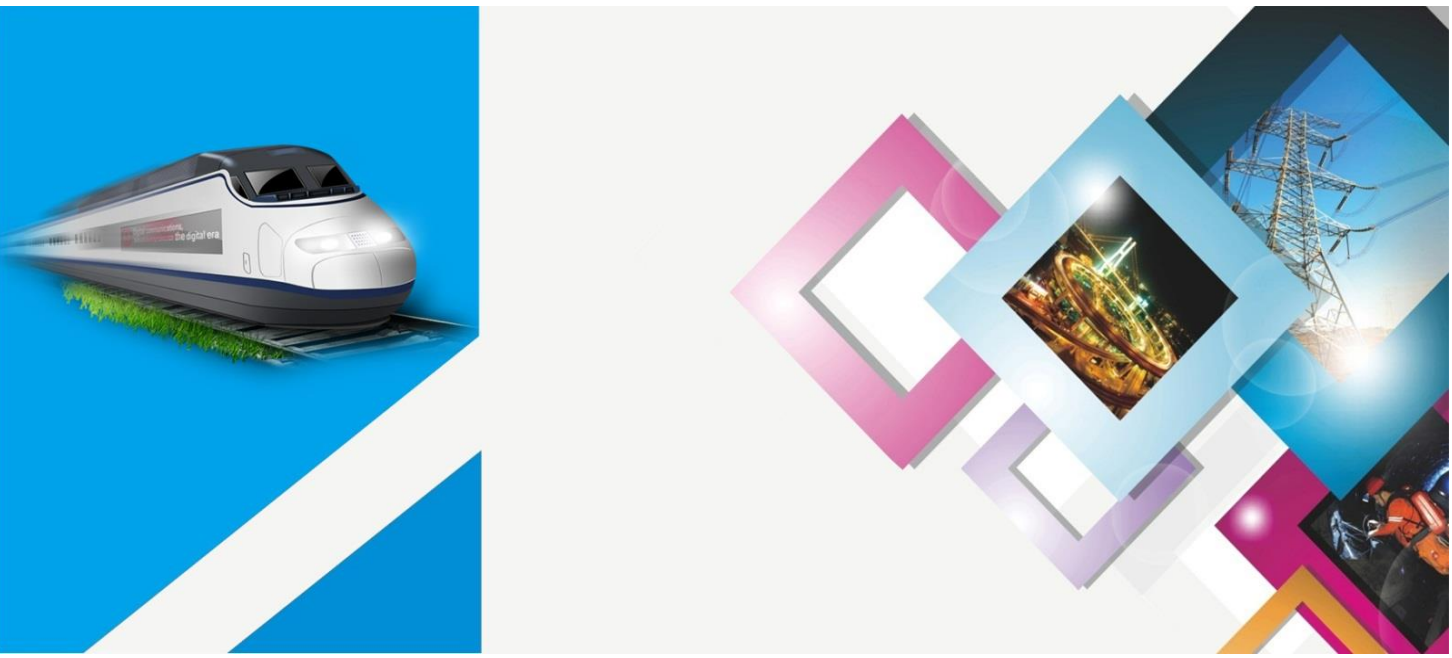

IEM618-4D-2C
Managed Industrial Ethernet Switch Module
Hardware Manual

Document version: 02

Release date: 2018-12-27

Copyright © 2018 3onedata Co., Ltd. All rights reserved.

No company or individual is allowed to duplicate or transmit this manual in any forms without written permission issued by 3onedata Co., Ltd.

Trademark statement

3onedata Make network communication more reliable, 3onedata® and 3One data are the registered trademark owned by 3onedata Co., Ltd. And other trademarks mentioned in this manual belong to their corresponding companies.

Notes

Purchased product, service or features should be constrained by 3ondedata commercial contracts and clauses. The whole or part product, service or features described in this document may beyond purchasing or using range. 3onedata won't make any statement or warranty for this document content unless any other appointment exists.

Due to product version upgrading or other reason, this document content will be upgraded periodically. Unless other appointment exists, this document only for usage guide, all statement, information and suggestion in this document won't constitute any warranty.



3onedata Co., Ltd.

Headquarter address:	3/B, Zone 1, Baiwangxin High Technology Industrial Park, Song Bai Road, Nanshan District, Shenzhen, 518108, China
Technology support:	tech-support@3onedata.com
Service hotline:	+86-400-880-4496
E-mail:	sales@3onedata.com
Fax:	+86-0755-26703485
Website:	http://www.3onedata.com

Preface

The managed industrial Ethernet switch module hardware manual has introduced following features of this module:

- Product overview
- Encapsulation and size
- Pins definition
- Reference circuit

Readers

This manual mainly suits for engineers as follows:

- On-site technical support and maintenance staffs
- Hardware engineers

Text Format Convention

Format	Description
“”	Words with "" represent the interface words. e.g.: "The port No.".
>	Multi-level path is separated by ">". Such as opening the local connection path description: Open "Control Panel> Network Connection> Local Area Connection".
Light Blue Font	Represent the words click to achieve hyperlink. Font color as: "Light blue".
About This Chapter	The "About This Chapter" section provides links to each section and corresponding principles / operating chapters in this chapter.

Icon Convention

Format	Description
Notice	Reminder the announcements in the operation, improper operation may result in data loss or equipment damage.

Copyright © 3onedata Co., Ltd.

Format	Description
 Warning	Pay attention to the notes on the mark, improper operation may cause personal injury.
 Note	Make a necessary supplementary instruction for operation description.
 Key	Configuration, operation, or tips for device usage.
 Tips	Pay attention to the operation or information to ensure success device configuration or normal working.

Revision Record

Version NO.	Revision Data	Revision Description
01	2015-08	Product release
02	2018-12-27	Document upgrading

Copyright © 3onedata Co., Ltd.

Content

PREFACE 1
CONTENT I
1 PRODUCT OVERVIEW 1
1.1 PRODUCT INTRODUCTION 1
1.2 PRODUCT SPECIFICATION 1
2 DIMENSION 3
2.1 PACKAGE DESIGN 3
2.2 PRODUCT DIMENSION 5
3 DESCRIPTION OF PIN DEFINITION 7
3.1 VIEW OF PIN DEFINITION 7
3.2 DESCRIPTION OF PINS DEFINITION NAME 8
3.3 LIST OF PINS DEFINITION 9
3.4 DETAILED DESCRIPTION OF THE PINS DEFINITION 11
3.4.1 100M Ethernet Port 11
3.4.2 Power Supply and Ground Signal 13
3.4.3 TTL UART Port 14
3.4.4 TTL CAN port 16
3.4.5 CONSOLE Port (Debugging Port) 16
3.4.6 I/O Alarm Interface 16
3.4.7 Indicator 17
3.4.8 Other Pins 18
3.4.9 Reserved Pins 18
4 REFERENCE CIRCUIT 19
4.1 100M ETHERNET PORT 19
4.2 TTL UART PORT 21
4.3 TTL CAN PORT 25
4.4 CONSOLE PORT (DEBUGGING PORT) 26
4.5 I/O ALARM INTERFACE 27
4.6 RESET INTERFACE 27

Copyright © 3onedata Co., Ltd.

1 Product Overview

1.1 Product Introduction

IEM618-4D-2C layer 2 managed embedded industrial Ethernet switch module is compliant with the features of high integration, small size, rich functions, simple and convenient operation.It includes the following interface types:

- 8 100M Ethernet ports, support 10/100Base-T(X) copper port and 100Base-FX fiber port.
- 4 TTL UART interfaces, expandable RS-232/485/422 serial port, support serial port server function of serial port to Ethernet.
- 2 TTL CAN ports, support CAN server function of CAN to Ethernet bidirectional transparent transmission.
- 1 CONSOLE port for command line coordination and module debugging.
- 2 I/O alarm ports for expandable relay alarm.

1.2 Product Specification

Interface	
100M copper port	10/100Base-T(X), automatic flow control, full/half duplex mode, MDI/MDI-X autotunning
100M fiber port	100Base-FX
CONSOLE port	CLI command line management port
I/O port	Alarm input and output
TTL UART port	Interface type: optional RS-232/RS-485/RS-422 Baud rate: 300bps-115200bps
TTL CAN port	Baud rate: 5kbps-1000kbps
Exchange Properties	

Copyright © 3onedata Co., Ltd.

Backplane bandwidth	2G
Packet buffer size	1Mbit
MAC table size	2K
Power Supply	
Input power	3.3VDC
Power consumption	
Full-load consumption	＜1.5W
Environmental Limits	
Operating temperature	-40~75℃
Storage temperature	-40~85℃
Operating humidity	0~95%
Physical Characteristics	
Installation	Embedded installation (insertion form of pin header and female header)
Size (W×H×D):	72mm × 8.9mm × 54mm

Copyright © 3onedata Co., Ltd.

2 Dimension

2.1 Package Design

The structure chart of the module as follows:

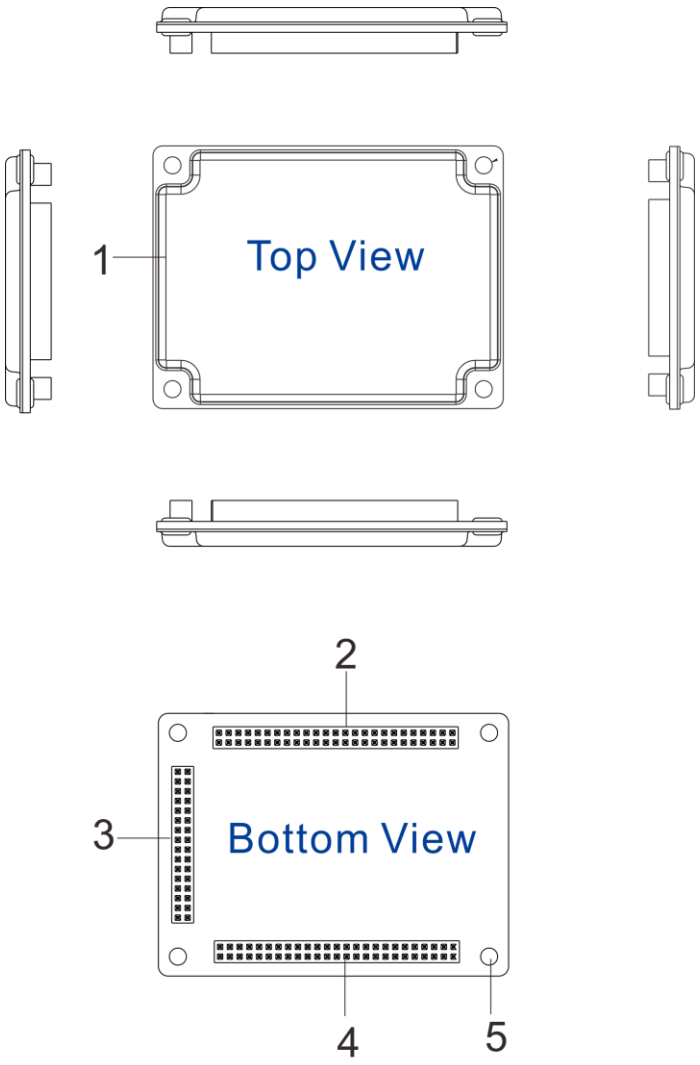

Copyright © 3onedata Co., Ltd.

Detailed description of each package label is shown in the following table:

Package	Name	Specification	Description
1	Shielding case	72mm*54mm	It can be connected to cooling fin.
2	Female header A	Direct-embedded female header 2*25, pins pitch 2mm, height of female header 4.3mm, square hole 0.5mm*0.5mm	–
3	Female header B	Direct-embedded female header 2*16, pins pitch 2mm, height of female header 4.3mm, square hole 0.5mm*0.5mm	–
4	Female header C	Direct-embedded female header 2*25, pins pitch 2mm, height of female header 4.3mm, square hole 0.5mm*0.5mm	–
5	Location hole	The inner diameter is Φ3.5mm, and distance from center of the circle to the four sides of PCB (Printed circuit board) is 4mm. Note: Copper post can be used to fix the module on the backplane.	4 location holes are in the same size.

Refer to the following view for the specification of corresponding pin header of the female header B. Unit: mm

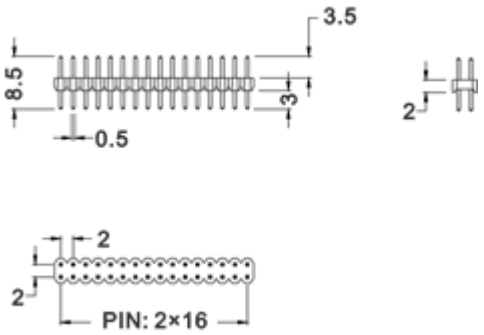

Refer to the following view for the specification of corresponding pin header of the female header A and C. Unit: mm

Copyright © 3onedata Co., Ltd.

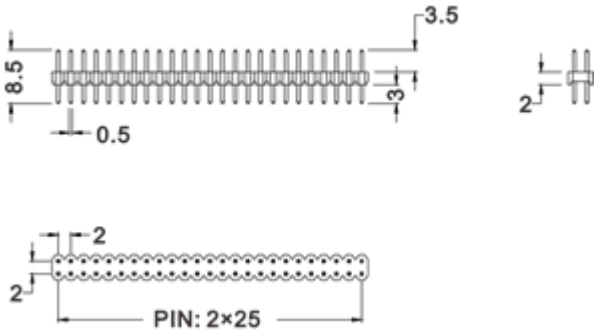

2.2 Product Dimension

Structure chart of the module as follows:

Unit: mm

Copyright © 3onedata Co., Ltd.

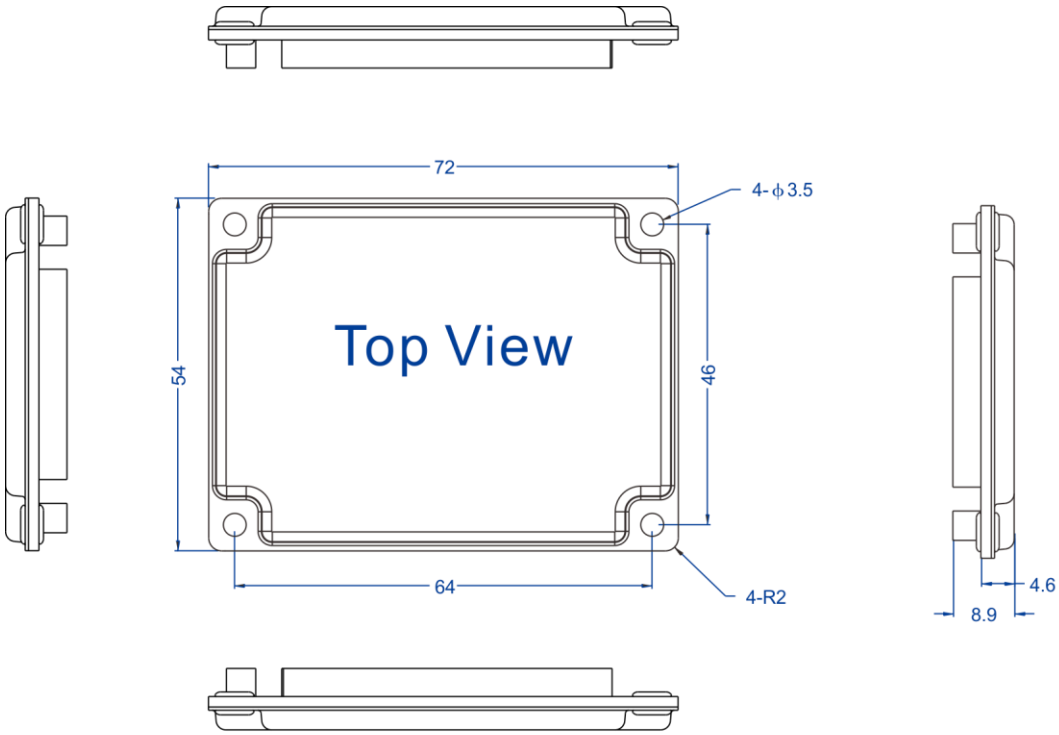

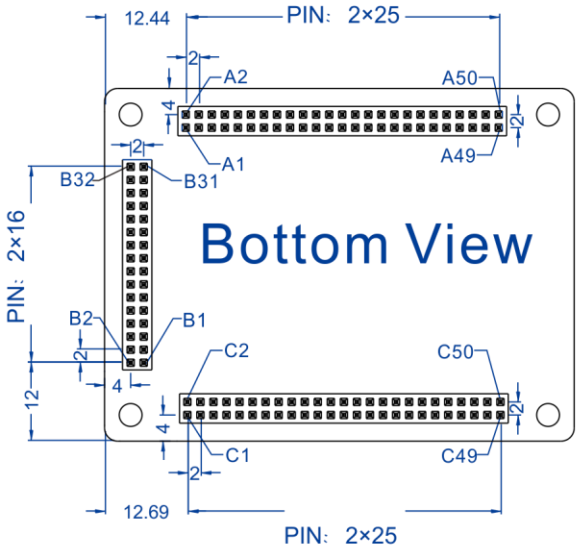

Copyright © 3onedata Co., Ltd.

3 Description of Pin Definition

3.1 View of Pin Definition

Note

To facilitate the user to view the pins definition when routing the PCB (printed circuit board), the pins definition diagram adopts the top view angle as below.

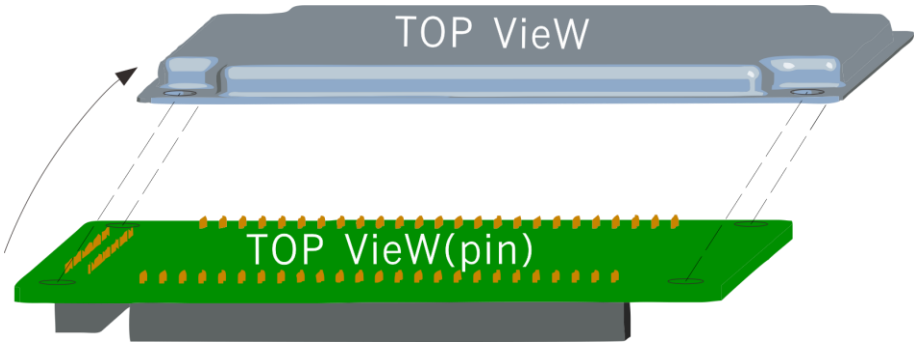

The top view of the module pin number and name as follows:

Copyright © 3onedata Co., Ltd.

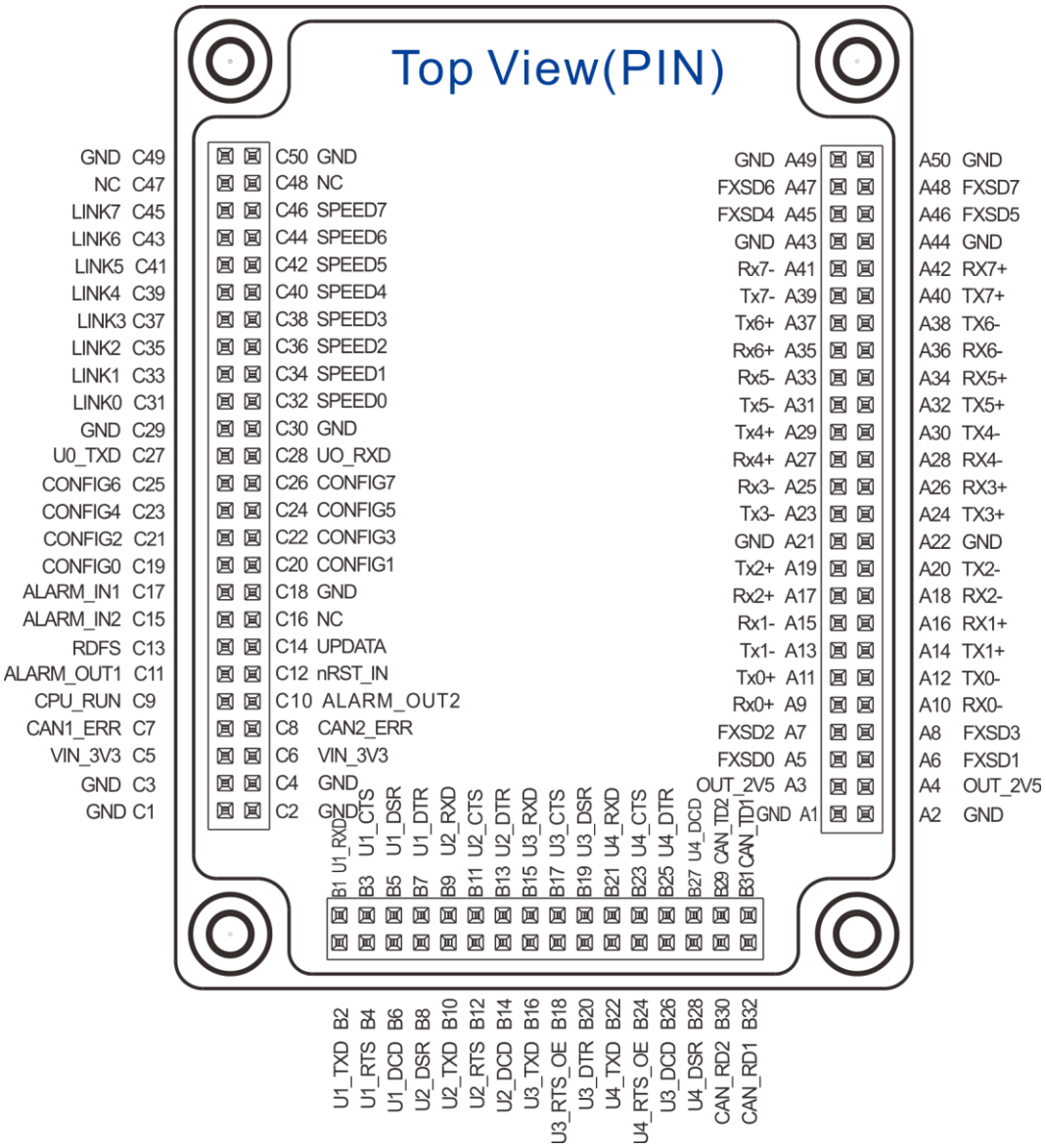

3.2 Description of Pins Definition Name

Pin Identification	Description
RX	Receive Data
TX	Transmit Data
GND	Ground
FXSD	FX Signal Detection
NC	Not Connected
NRST	Reset
OUT	Output
CONFIG	Config

Copyright © 3onedata Co., Ltd.

RDFS	Restore Default Factory Settings
IN	Input
UPDATA	Update
OUT_2V5	2.5VDC output
VIN_3V3	3.3VDC output
CAN	Controller Area Network, CAN Port
ERR	Error
U	Universal Asynchronous Receiver/Transmitter
CTS	Clear to send
RTS	Request to send
DSR	Data set ready
DCD	Data carrier detect
DTR	Data terminal ready

3.3 List of Pins Definition

Pins definition of female header A (A1-A50)

Pin Number	Pin Name	Pin Number	Pin Name
A1	GND	A2	GND
A3	OUT_2V5	A4	OUT_2V5
A5	FXSD0	A6	FXSD1
A7	FXSD2	A8	FXSD3
A9	RX0+	A10	RX0-
A11	TX0+	A12	TX0-
A13	TX1-	A14	TX1+
A15	RX1-	A16	RX1+
A17	RX2+	A18	RX2-
A19	TX2+	A20	TX2-
A21	GND	A22	GND
A23	TX3-	A24	TX3+
A25	RX3-	A26	RX3+
A27	RX4+	A28	RX4-
A29	TX4+	A30	TX4-
A31	TX5-	A32	TX5+

Copyright © 3onedata Co., Ltd.

A33	RX5-	A34	RX5+
A35	RX6+	A36	RX6-
A37	TX6+	A38	TX6-
A39	TX7-	A40	TX7+
A41	RX7-	A42	RX7+
A43	GND	A44	GND
A45	FXSD4	A46	FXSD5
A47	FXSD6	A48	FXSD7
A49	GND	A50	GND

Pins definition of female header B (B1-B32)

Pin Number	Pin Name	Pin Number	Pin Name
B1	U1_RXD	B2	U1_TXD
B3	U1_CTS	B4	U1_RTS
B5	U1_DSR	B6	U1_DCD
B7	U1_DTR	B8	U2_DSR
B9	U2_RXD	B10	U2_TXD
B11	U2_CTS	B12	U2_RTS
B13	U2_DTR	B14	U2_DCD
B15	U3_RXD	B16	U3_TXD
B17	U3_CTS	B18	U3_RTS_OE
B19	U3_DSR	B20	U3_DTR
B21	U4_RXD	B22	U4_TXD
B23	U4_CTS	B24	U4_RTS_OE
B25	U4_DTR	B26	U3_DCD
B27	U4_DCD	B28	U4_DSR
B29	CAN_TD2	B30	CAN_RD2
B31	CAN_TD1	B32	CAN_RD1

Pins definition for female header C (C1-C50)

Pin Number	Pin Name	Pin Number	Pin Name
C1	GND	C2	GND
C3	GND	C4	GND
C5	VIN_3V3	C6	VIN_3V3
C7	CAN1_ERR	C8	CAN2_ERR

Copyright © 3onedata Co., Ltd.

C9	CPU_RUN	C10	ALARM_OUT2
C11	ALARM_OUT1	C12	nRST _IN
C13	RDFS	C14	UPDATA
C15	ALARM_IN2	C16	NC
C17	ALARM_IN1	C18	GND
C19	CONFIG0	C20	CONFIG1
C21	CONFIG2	C22	CONFIG3
C23	CONFIG4	C24	CONFIG5
C25	CONFIG6	C26	CONFIG7
C27	U0_TXD	C28	UO_RXD
C29	GND	C30	GND
C31	LINK0	C32	SPEED0
C33	LINK1	C34	SPEED1
C35	LINK2	C36	SPEED2
C37	LINK3	C38	SPEED3
C39	LINK4	C40	SPEED4
C41	LINK5	C42	SPEED5
C43	LINK6	C44	SPEED6
C45	LINK7	C46	SPEED7
C47	NC	C48	NC
C49	GND	C50	GND

3.4 Detailed Description of the Pins Definition

3.4.1100M Ethernet Port

Description of pins definition of 100M Ethernet ports:

Pin Name	Pin Number	Type	Functional Description
RX0+	A9	Input	Positive terminal of data receiving of 100M Ethernet port. • When the port is configured as a 100M electrical port, RXP [0:7] is directly connected to the network
RX1+	A16		
RX2+	A17		
RX3+	A26		
RX4+	A27		

Copyright © 3onedata Co., Ltd.

RX5+	A34		transformer. • When the port is configured as a 100M fiber port, RXP [0:7] is directly connected to the positive output terminal of the fiber optic transceiver. • The pin is recommended to be earthed when it's not used.
RX6+	A35		
RX7+	A42		
RX0-	A10	Input	Negative terminal of data receiving of 100M Ethernet port. • When the port is configured as a 100M copper port, RXP [0:7] is directly connected to the network transformer. • When the port is configured as a 100M fiber port, RXP [0:7] is directly connected to the negative output terminal of the fiber optic transceiver. • The pin is recommended to be earthed when it's not used.
RX1-	A15A15		
RX2-	A18		
RX3-	A25		
RX4-	A28		
RX5-	A33		
RX6-	A36		
RX7-	A41		
TX0+	A11	Output	Positive terminal of data sending of 100M Ethernet port. • When the port is configured as a 100M copper port, TXP [0:7] is directly connected to the network transformer. • When the port is configured as a 100M fiber port, TXP [0:7] is directly connected to the positive input terminal of the fiber optic transceiver. • The pin is recommended to be earthed when it's not used.
TX1+	A14		
TX2+	A19		
TX3+	A24		
TX4+	A29		
TX5+	A32		
TX6+	A37		
TX7+	A40		
TX0-	A12	Output	Negative terminal of data sending of 100M Ethernet port. • When the port is configured as a 100M copper port, TXN [0:7] is directly connected to the network transformer.
TX1-	A13		
TX2-	A20		
TX3-	A23		
TX4-	A30		
TX5-	A31		

Copyright © 3onedata Co., Ltd.

TX6-	A38		• When the port is configured as a 100M fiber port, TXN [0:7] is directly connected to the negative input terminal of the fiber optic transceiver. • The pin is recommended to be earthed when it's not used.
TX7-	A39		
FXSD0	A5	Input	Input terminal of the optical signal of 100M Ethernet port. • When ports 0-7 are configured as 100M fiber ports, FXSD is used to detect whether the optical module has detected valid signal. A high level indicates that a signal has been detected. • When ports 0-7 are configured as 100M copper ports, FXSD cannot be reserved. It is recommended to be earthed via 4.7K resistor.
FXSD1	A6		
FXSD2	A7		
FXSD3	A8		
FXSD4	A45		
FXSD5	A46		
FXSD6	A47		
FXSD7	A48		
CONFIG0	C19	Input	Pins configuration of 100M Ethernet ports. • When CONFIG is earthed, ports 0-7 are configured as 100M copper ports. • When CONFIG is connected to 3.3V via a 4.7K resistor, ports 0-7 are configured as 100M fiber ports. • The pin can be reserved when it's not used.
CONFIG1	C20		
CONFIG2	C21		
CONFIG3	C22		
CONFIG4	C23		
CONFIG5	C24		
CONFIG6	C25		
CONFIG7	C26		

3.4.2 Power Supply and Ground Signal

Description of pins definition of power supply and ground signal:

Pin Name	Pin Number	Type	Functional Description
VIN_3V3	C5, C6	Input	3.3V voltage input Power consumption is less than 1.5W
OUT_2V5	A3, A4	Output	2.5V power output It can't be used for other

Copyright © 3onedata Co., Ltd.

Pin Name	Pin Number	Type	Functional Description
			applications except for supplying electricity for the center tap of network transformer of 100M Ethernet port.
GND	A1, A2, A21, A22, A43, A44, A49, A50, C1, C2, C3, C4, C18, C29, C30, C49, C50	Ground	Ground signal

3.4.3 TTL UART Port

The TTL UART can be expanded to RS-232/RS-485/RS-422 serial ports.

Definition description of pin TTL UART:

Pin Name	Pin Number	Type	Functional Description
U1_RX	B1	Input	Serial port 1 receives data
U1_TX	B2	Output	Serial port 1 transmits data
U1_CTS	B3	Input	Clear to send signal of serial port 1
U1_RTS	B4	Output	Request to send signal of serial port 1 RS485 enables request to send signal in the high level
U1_DSR	B5	Input	Data set ready signal of serial port 1.
U1_DCD	B6	Input	Data carrier detect signal of serial port 1
U1_DTR	B7	Output	Data terminal ready signal of serial port 1.
U2_RX	B9	Input	Serial port 2 receives data
U2_TX	B10	Output	Serial port 2 transmits

Copyright © 3onedata Co., Ltd.

Pin Name	Pin Number	Type	Functional Description
			data
U2_CTS	B11	Input	Clear to send signal of serial port 2
U2_RTS	B12	Output	Request to send signal of serial port 2
U2_DSR	B8	Input	Data set ready signal of serial port 2
U2_DCD	B14	Input	Data carrier detect signal of serial port 2
U2_DTR	B13	Output	Data terminal ready signal of serial port 2
U3_RX	B15	Input	Serial port 3 receives data
U3_TX	B16	Output	Serial port 3 transmits data
U3_CTS	B17	Input	Clear to send signal of serial port 3
U3_RTS	B18	Output	Request to send signal of serial port 3
U3_DSR	B19	Input	Data set ready signal of serial port 3
U3_DCD	B26	Input	Data carrier detect signal of serial port 3
U3_DTR	B20	Output	Data terminal ready signal of serial port 3
U4_RX	B21	Input	Serial port 4 receives data
U4_TX	B22	Output	Serial port 4 transmits data
U4_CTS	B23	Input	Clear to send signal of serial port 4
U4_RTS	B24	Output	Request to send signal of serial port 4
U4_DSR	B28	Input	Data set ready signal of serial port 4
U4_DCD	B27	Input	Data carrier detect signal

Copyright © 3onedata Co., Ltd.

Pin Name	Pin Number	Type	Functional Description
			of serial port 4
U4_DTR	B25	Output	Data terminal ready signal of serial port 4

3.4.4 TTL CAN Port

Description of pins definition of 2 TTL CAN ports:

Pin Name	Pin Number	Type	Functional Description
CAN_TD1	B31	Output	CAN 1 transmits data
CAN_RD1	B32	Input	CAN 1 receives data
CAN_TD2	B29	Output	CAN 2 transmits data
CAN_RD2	B30	Input	CAN 2 receives data

3.4.5 CONSOLE Port (Debugging Port)

Description of pins definition of CONSOLE port:

Pin Name	Pin Number	Type	Functional Description
U0_RXD	C28	Input	Serial port 0 receives data Serial port 0 is only used for CONSOLE port
U0_TXD	C27	Output	Serial port 0 transmits data Serial port 0 is only used for CONSOLE port

3.4.6 I/O Alarm Interface

Description of pins definition of I/O alarm interface:

Pin Name	Pin Number	Type	Functional Description
ALARM_IN1	C17	Input	Pins for two alarm signal inputs. Alarm input type can be self-configured.
ALARM_IN2	C15		

Copyright © 3onedata Co., Ltd.

Pin Name	Pin Number	Type	Functional Description
ALARM_OUT1	C11	Output	Pins for two alarm signal outputs. Active low.
ALARM_OUT2	C10		

3.4.7 Indicator

Description of pins definition of the indicator:

Pin Name	Pin Number	Type	Functional Description
CPU_RUN	C9	Output	CPU running indicator. Active low.
CAN1_ERR	C7	Output	CAN1 error indicator. Active low.
CAN2_ERR	C8	Output	CAN2 error indicator. Active low.
SPEED0	C32	Output	Pin SPEED [0:7] of rate indicator of 100M Ethernet port. • When the port is configured as 10BASE-T, the pin outputs a high level signal. • When the port is configured as 100BASE-TX, the pin outputs a low level signal.
SPEED1	C34		
SPEED2	C36		
SPEED3	C38		
SPEED4	C40		
SPEED5	C42		
SPEED6	C44		
SPEED7	C46		
LINK0	C31	Output	Pin LINK [0:7] of port connection and data transceiving indicator of 100M Ethernet port. • When the pin outputs a high
LINK1	C33		

Copyright © 3onedata Co., Ltd.

Pin Name	Pin Number	Type	Functional Description
LINK2	C35		level signal, it indicates that the corresponding port is not connected. • When the pin outputs a low level signal, it indicates that the corresponding port is connected. • When the pin outputs high and low alternate level signals, it indicates that the corresponding port is transmitting data.
LINK3	C37		
LINK4	C39		
LINK5	C41		
LINK6	C43		
LINK7	C45		

3.4.8 Other Pins

Pin Name	Pin Number	Type	Functional Description
nRST_IN	C12	Input	System reset pin, active low
RDFS	C13	Input	Restore factory defaults, active low
UPDATA	C14	Input	Program upgrading

3.4.9 Reserved Pins

Pin Name	Pin Number	Type	Functional Description
NC	C16, C47, C48	Reserved	Please keep the pin reserved when it's not used.

Copyright © 3onedata Co., Ltd.

4 Reference Circuit

Note

The identification of ground signal in the reference circuit as follows:

- ⏚ : GND, ground signal;
- ⏚: FG, protective grounding of housing.

4.1 100M Ethernet Port

Pin Name	Type	Configuration Method
RX+[0:7]	Positive input terminal of data receiving	100M Ethernet port configuration: • When CONFIG and FXSD are grounded, ports 0-7 are configured as 10/100BASE-T/TX. • When CONFIG is connected to +3.3V (DC) through a 4.7K resistor and FXSD is connected to the SD signal of the optical module, ports 0-7 are configured as 100BASE-FX.
RX-[0:7]	Negative input terminal of data receiving	
TX+[0:7]	Positive output terminal of data transmitting	
TX-[0:7]	Negative output terminal of data transmitting	
FXSD[0:7]	Input terminal of optical signal	
CONFIG[0:7]	Configuration port	
LINK[0:7]	Output	Pin LINK [0:7] of port

Copyright © 3onedata Co., Ltd.

		connection and data transceiving indicator of 100M Ethernet port. • When the pin outputs a high level signal, it indicates that the corresponding port is not connected. • When the pin outputs a low level signal, it indicates that the corresponding port is connected. • When the pin outputs high and low alternate level signals, it indicates that the corresponding port is transmitting data.
SPEED[0:7]	Output	Pin SPEED [0:7] of rate indicator of 100M Ethernet port. • When the port is configured as 10BASE-T, the pin outputs a high level signal. • When the port is configured as 100BASE-TX, the pin outputs a low level signal.

Reference Circuit of 100M Copper Port

The network transformer in the reference circuit diagram of the 100M copper port is a 1:1 network transformer.The recommended model is H1102 or other compatible products. The center tap of network transformer needs to be connected to the A3, A4 and other pins of the module. These pins provide a level of +2.5V.

Copyright © 3onedata Co., Ltd.

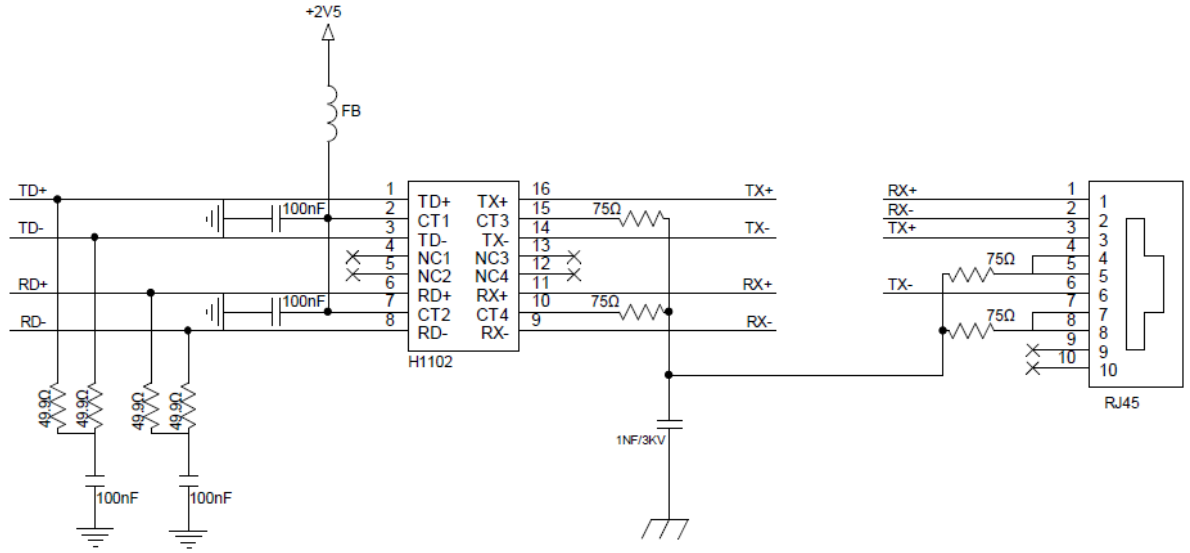

Reference Circuit of 100M Fiber Port

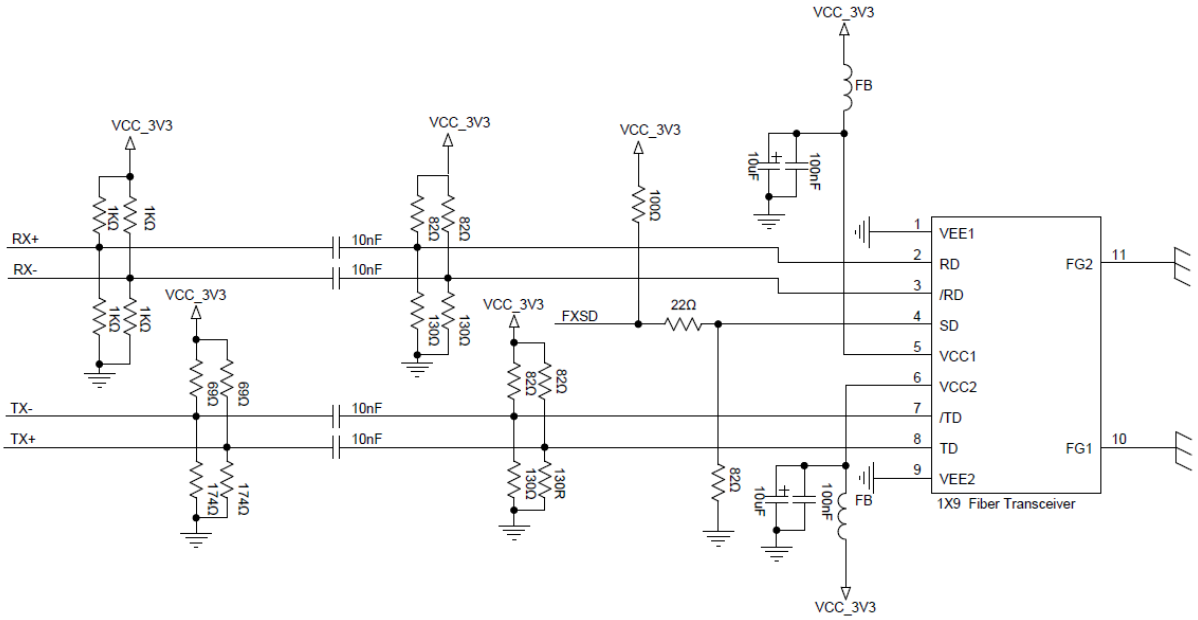

4.2 TTL UART Port

The module includes 4 TTL UART interfaces, which can be configured as RS-232 and RS-485/422 communication modes.User can configure the communication mode according to the reference circuit and description information.

Pin Name	Type	Configuration Method
U_RX[1:4]	Input	Serial ports 1-4 receive data
U_TX[1:4]	Output	Serial ports 1-4 transmit data

Copyright © 3onedata Co., Ltd.

U_CTS[1:4]	Input	Clear to send signal of serial ports 1-4
U_RTS[1:4]	Output	Request to send signal of serial ports 1-4 RS485 enables request to send signal in the high level
U_DSR[1:4]	Input	Data set ready signal of serial ports 1-4.
U_DCD[1:4]	Input	Data carrier detection signal of serial ports 1-4
U_DTR[1:4]	Output	Data terminal ready signal of serial ports 1-4.

Reference Circuit of RS-232

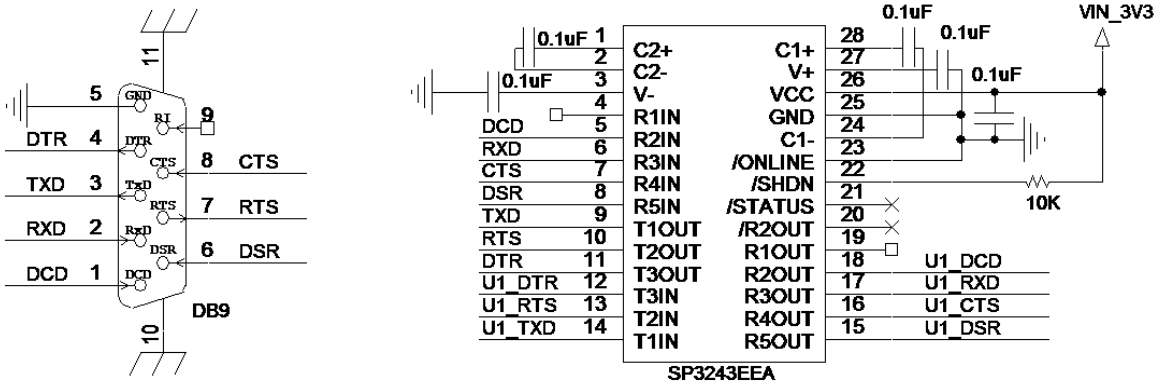

Reference Circuit of RS-485 (two-wire system)

RS-485 two-wire connection adopts half-duplex communication mode and the bus topology under which up to 32 nodes can be connected on the same bus.In the RS-485 communication network, the master-slave communication mode is generally adopted, that is, one host has multiple slaves.RS-485 transmits and receives data in the differential mode.

Copyright © 3onedata Co., Ltd.

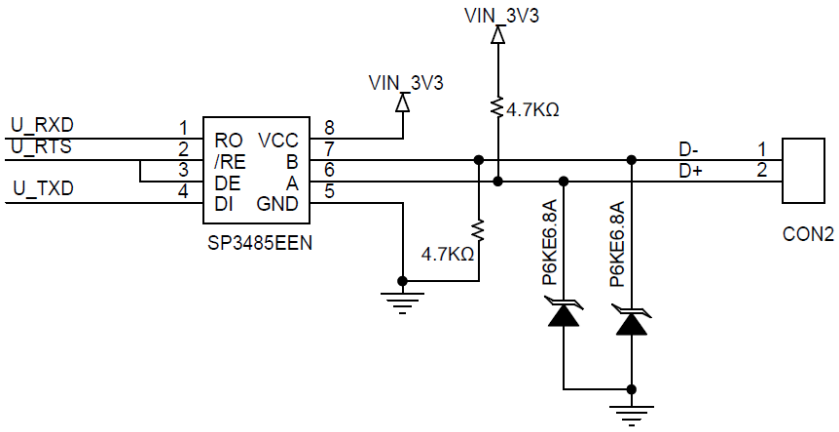

Reference Circuit of RS-485 (two-wire system) with Isolation

Isolated power supply:

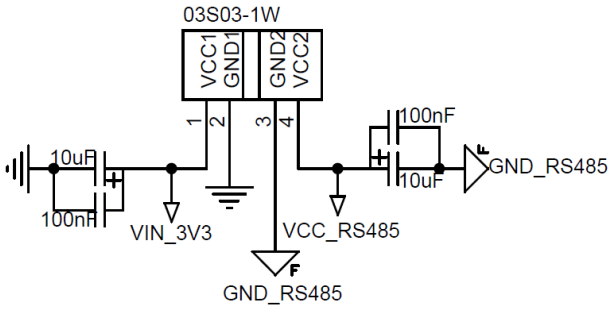

Signal isolation:

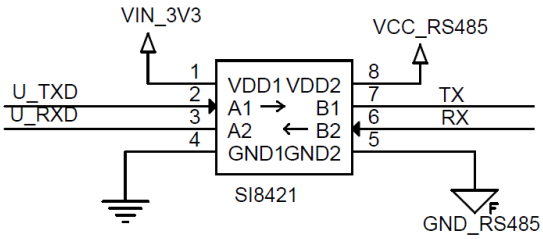

Directional automatic control circuit:

Copyright © 3onedata Co., Ltd.

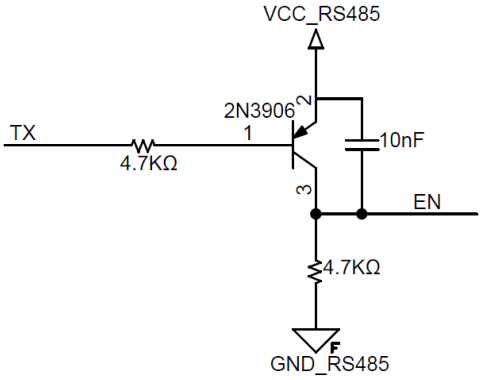

Serial port to RS-485 circuit:

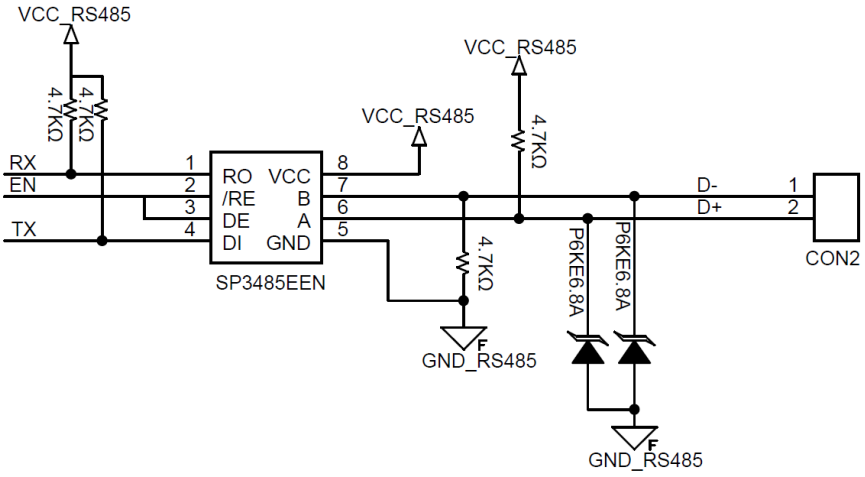

Reference Circuit of RS-422

RS-422 four-wire connection adopts full-duplex communication mode, which can realize point-to-multipoint.

Copyright © 3onedata Co., Ltd.

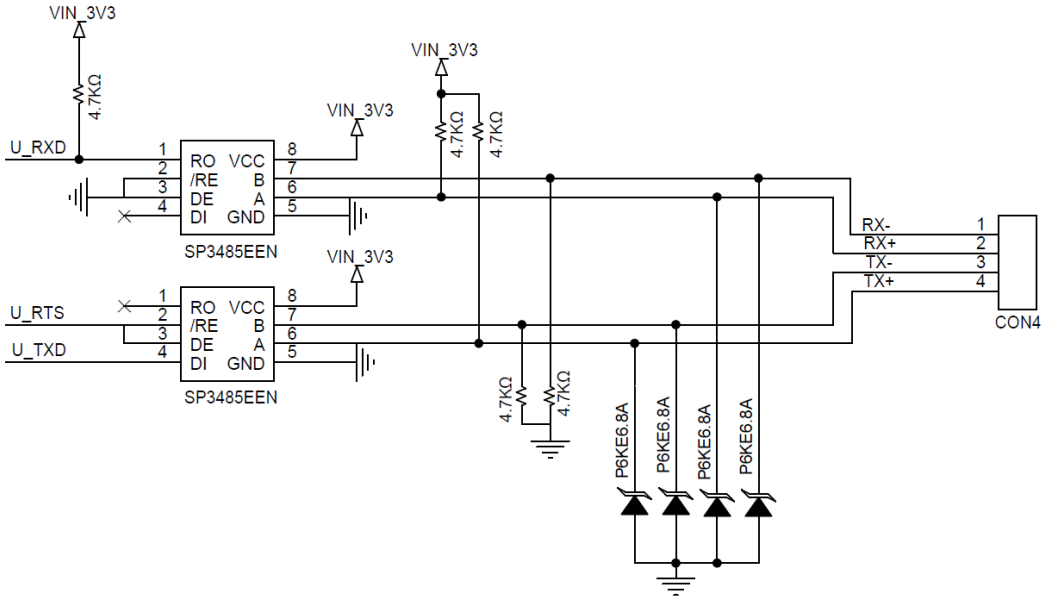

4.3 TTL CAN Port

The module includes two CAN bus interfaces, and 128 contacts can be attached to the bus.

Pin Name	Type	Configuration Method
CAN_TD[1:2]	Output	CAN transmits data
CAN_RD[1:2]	Input	CAN receives data
CAN1_ERR	Output	CAN error indicator. Active low.
CAN2_ERR	Output	

Reference Circuit of CAN

The CAN bus is connected to the physical bus through the two output terminals CANH and CANL of the CAN transceiver interface chip A82C250. And the state of CANH terminal can only be a high level or a reserved state, and the CANL terminal can only be a low level or a reserved state. And a terminating resistor is added to the CAN terminal due to its different level properties.

Copyright © 3onedata Co., Ltd.

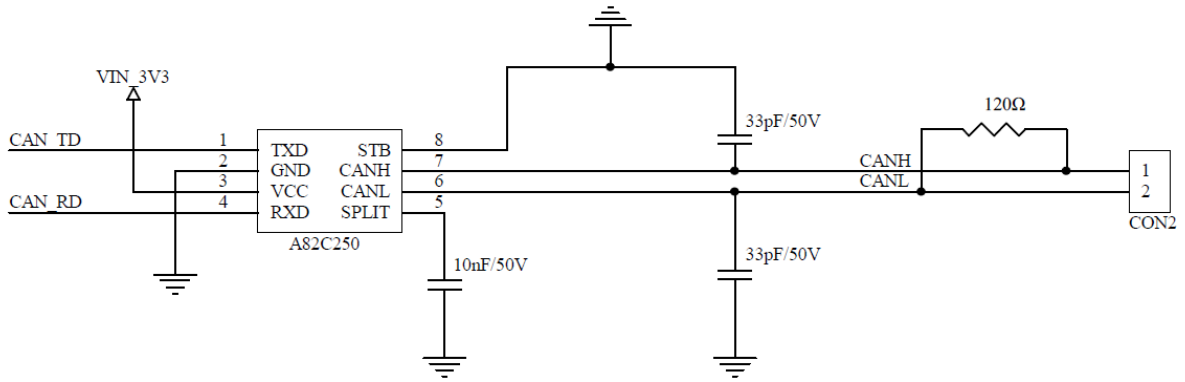

4.4 CONSOLE Port (Debugging Port)

The UART0 debugging interface is used as the CONSOLE port of this module, and is mainly used to build the CLI management platform.

Pin Name	Type	Functional Description
U0_RXD	Input	Serial port 0 receives data Serial port 0 is only used for CONSOLE port
U0_TXD	Output	Serial port 0 transmits data Serial port 0 is only used for CONSOLE port

Reference Circuit of CONSOLE Port

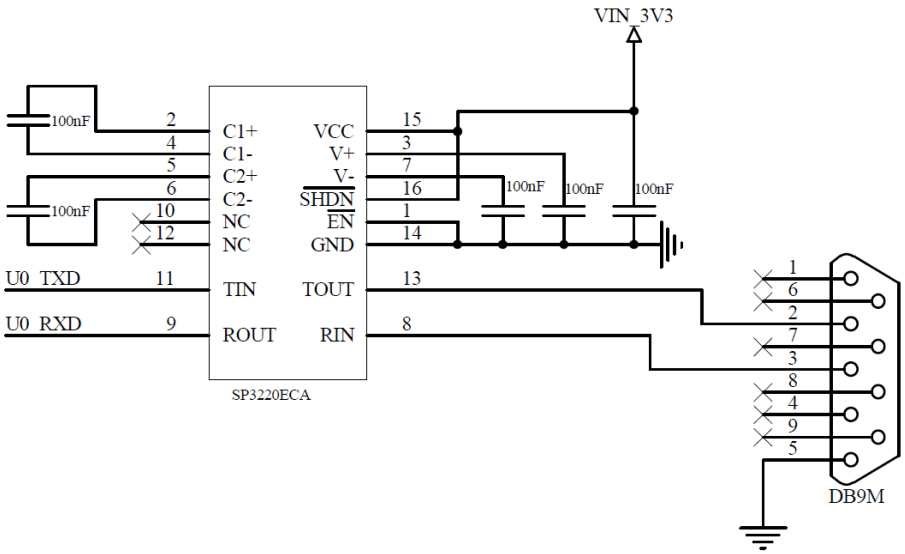

Copyright © 3onedata Co., Ltd.

4.5 I/O Alarm Interface

The module includes 2 alarm signal inputs and can configure the alarm input type by itself. And it includes 2 alarm signal outputs, which can be used for relay alarm output and are active low.

Pin Name	Type	Configuration Method
ALARM_IN1	Input	Pins for two alarm signal inputs. Alarm input type can be self-configured.
ALARM_IN2		
ALARM_OUT1	Output	Pins for alarm signal output. The default is active low, high and low level can be configured
ALARM_OUT2	Output	Pins for alarm signal output. Active low.

Reference Circuit of Relay Alarm

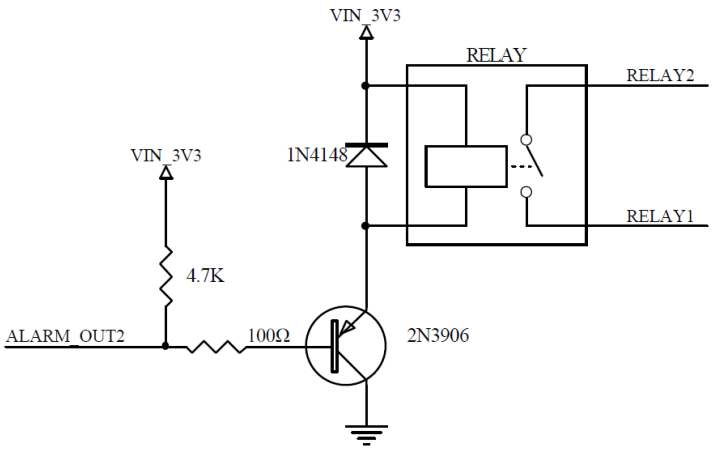

4.6 Reset Interface

The module provides a pin of external manual reset input and can be designed with an external hardware reset circuit for manual reset.

Copyright © 3onedata Co., Ltd.

Pin Name	Type	Configuration Method
nRST_IN	Input	The reset pin of the module, the system enters the reset state when the pin inputs low level for more than 200ms.

Reference Circuit of Reset

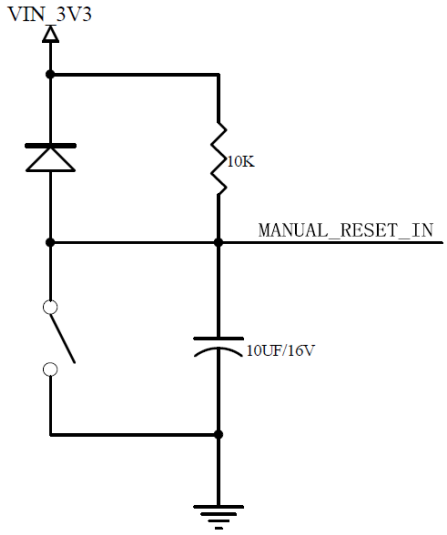

Copyright © 3onedata Co., Ltd.



3onedata Co., Ltd.

Headquarter address: 3/B, Zone 1, Baiwangxin High Technology Industrial Park, Song Bai Road, Nanshan District, Shenzhen

Technology support: tech-support@3onedata.com

Service hotline: +86-400-880-4496

Official Website: http://www.3onedata.com

Official website: http://www.3onedata.com

Copyright © 3onedata Co., Ltd.