3onedata
Make network communication more reliable

IAP2600 Series
Industrial Dual-band Wireless AP
Quick Installation Guide

3onedata Co., Ltd.

Address: 3/B, Zone 1, Baiwangxin High Technology Industrial Park, Xili, Nanshan District, Shenzhen

Website: www.3onedata.com

Tel: +86 0755-26702688

Fax: +86 0755-26703485

【Package Checklist】

Please check whether the package and accessories are intact while using the dual-band wireless AP for the first time.

1. Wireless AP x1
2. Quick installation guide
3. CD
4. Wall mounting attachment
5. Certification
6. Warranty card

If any of these items are damaged or lost, please contact our company or dealers, we will solve it ASAP.

【Product Overview】

The product is an industrial managed dual-band wireless AP with high performance and cost-effectiveness. The models are as follows:

Model I IAP2600-4A25-PDP12_48 (1 gigabit PoE WAN + 1 gigabit PoE LAN + 2 2.4G antenna interfaces + 2 5.8G antenna interfaces + 12~48VDC power supply)

Model II IAP2600-4A25-PD (1 gigabit PoE WAN + 1 gigabit PoE LAN + 2 2.4G antenna interfaces + 2 5.8G antenna interfaces)

【Panel Design】

➢ **Front view**

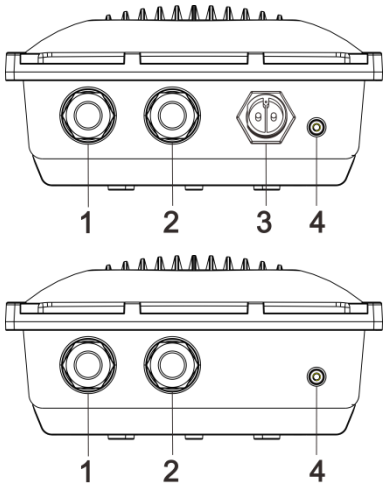

➢ **Rear view**

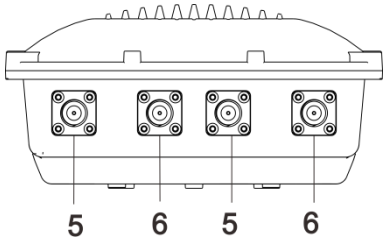

➢ **Left view**

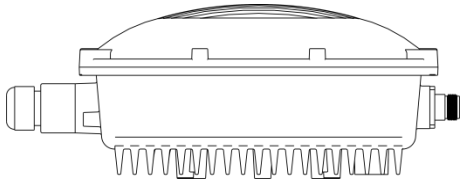

➢ **Right view**

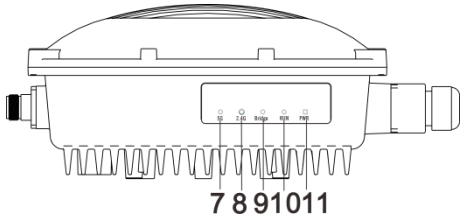

➢ **Top view**

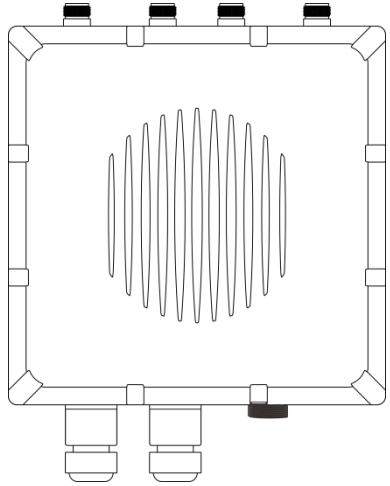

➢ **Bottom view**

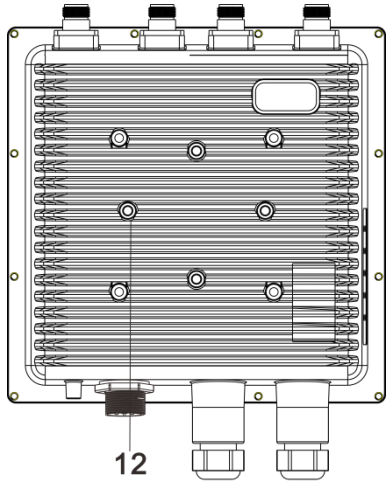

1. 10/100/1000Base-T(X) LAN port (PoE input)
2. 10/100/1000Base-T(X) WAN port (PoE input)
3. Input terminal blocks of DC power supply

4. Grounding screw
5. 5.8G omnidirectional antenna interface
6. 2.4G omnidirectional antenna interface
7. 5.8G signal indicator
8. 2.4G signal indicator
9. Network bridge indicator
10. Running indicator
11. Power supply indicator
12. Wall mounting location hole

【Mounting Dimension】

Unit: mm

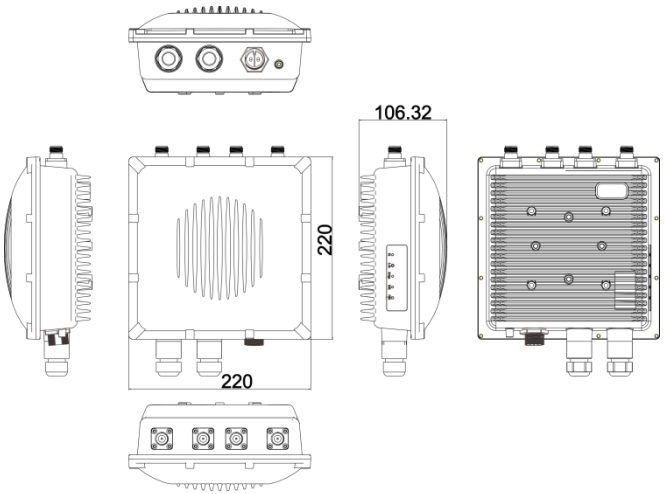

Note before mounting:

- Don't place or install the device in area near water or moist, keep the relative humidity of the device surrounding between 5%~95% without condensation.
- Before power on, please confirm the supported power supply specification to avoid over-voltage damaging the device.
- The device surface temperature is high after running, please avoid any direct contact in case of scalding.

【Wall-mounting the Device】

Step 1 Use 4 M6x10 Cross recessed countersunk flat head screws to mount the hanging panel on the backboard of the device.

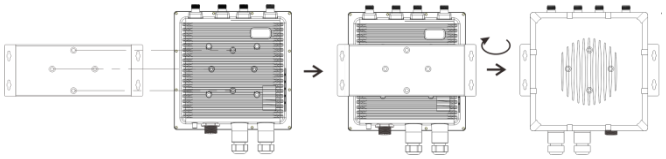

Step 2 Put the device on the wall it will be mounted as reference or to refer to its mounting dimension, and mark the locations of the 4 expansion screws.

Step 3 Mount 4 expansion screws on the wall.

Step 4 Hang the device on the expansion screws.

Step 5 Tighten the nuts, mounting ends.

【Disassembling the Device】

Step 1 Device powers off

Step 2 Hold the device steady and unscrew the nuts on the wall.

Step 3 Take out the device, disassembling ends.

【Power Supply Connection】

➢ **48VDC POE power supply input**

The WAN port and LAN port of this device supports standard 48V PoE power supply, which conforms to IEEE802.3af/at standard.

➢ **12~48VDC DC power supply input (optional)**



The model I of this series supports 2-pin input terminal blocks of DC power supply, non-polarity and anti-reverse connection. The input power supply range is 12~48VDC. The pin definitions of power supply are shown as follows:

Pin	1	2
Definition	V+	V-

【Checking LED Indicator】

The device provides LED indicators to monitor device's operation status and comprehensively simplify troubleshooting process. The detailed status of each LED is described in the table as below:

LED	Status	Description
5.8G	ON	5.8G wireless signal is running normally
	Blinking	5.8G wireless signal is transmitting data. The blinking frequency shows the rate of data transmission
	OFF	5.8G wireless signal is running abnormally or turned off
2.4G	ON	2.4G wireless signal is running normally
	Blinking	2.4G wireless signal is transmitting data. The blinking frequency shows the rate of data transmission
	OFF	2.4G wireless signal is running abnormally or turned off
Bridge	OFF	No bridging is established
	ON	The strength of bridging signal is 70~100
	1 time/1s Blinking	The strength of bridging signal is 30～70
	1 time/2s Blinking	The strength of bridging signal is 1～30
RUN	ON	Device is powered on or in abnormal condition
	OFF	Device is not powered on or in abnormal condition
	Blinking	Device is running normally
PWR	ON	Power supply connection is running normally
	OFF	Power supply is not connected or running abnormally

【Specification】

Standard	

Standard	IEEE802.3, IEEE802.3u, IEEE802.11b/g/n/a/ac, IEEE802.11i, IEEE802.11r, IEEE802.3af/at
Protocol	TCP/IP, DHCP, PPPOE, ICMP, ARP, HTTP
Interface	
WAN	1 10/100/1000Base-T(X) RJ45 port, supports POE48VDC power supply input
LAN	1 10/100/1000Base-T(X) RJ45 port, support PoE48VDC power supply input
Antenna	2 2.4G N-type (Female) ports 2 5.8G N-type (Female) ports
Transmission speed	
802.11n	6.5~300Mbps
802.11b	11/5.5/2/1Mbps
802.11g/a	54/48/36/24/18/12/9/6Mbps
802.11ac	65Mbps ~867Mbps
Radio frequency	
Channel	802.11b/g/n: 2.412GHz~2.4835GHz 802.11ac/n/a: 5.18GHz~5.825GHz
RF power output	20dBm
Modulation method	DBPSK, DQPSK, CCK, OFDM, 16-QAM, 64-QAM
Receiving sensitivity	
802.11n_HT40	-82dBm@MCS0, -64dBm@MCS7
802.11n_HT20	-85dBm@MCS0, -67dBm@MCS7
802.11g/a	-91dBm@6Mbps, -72dBm@54Mbps
802.11b	-93dBm@1Mbps, -87dBm@11Mbps
802.11ac	-84dBm@MCS0, -59dBm@MCS9
Transmitting power	
802.11n_HT40	20dBm@MCS0, 20dBm@MCS7
802.11n_HT20	20dBm@MCS0, 20dBm@MCS7
802.11g/a	20dBm@6Mbps, 20dBm@54Mbps
802.11b	20dBm@1Mbps, 20dBm@11Mbps
802.11ac	20dBm@MCS0, 20dBm@MCS9
Power supply	
Input power supply	POE 48VDC：support IEEE802.3af/at standard 12~48VDC (optional): support non-polarity, anti-reverse connection and 2A overcurrent protection
Indicator	5.8G signal indicator, 2.4G signal indicator, network bridging indicator, running indicator, power supply indicator
Power consumption	
No-load	＜4.51W@12VDC
Full-load	＜7.90W@12VDC
Operating environment	
Operating temperature	-40～75℃
Storage temperature	-40～85℃
Operating humidity	5%～95% (no condensation)
Protection grade	IP67 (metal shell)