Programmable Device Server User Manual

Ver. 2.4

Programmable Serial-to-Ethernet Device Servers

WARRANTY

All products manufactured by ICP DAS are warranted against defective materials for a period of one year from the date of delivery to the original purchaser.

WARNING

ICP DAS assumes no liability for damages consequent to the use of this product. ICP DAS reserves the right to change this manual at any time without notice. The information furnished by ICP DAS is believed to be accurate and reliable. However, no responsibility is assumed by ICP DAS for its use, nor for any infringements of patents or other rights of third parties resulting from its use.

COPYRIGHT

Copyright © 2018 by ICP DAS. All rights are reserved.

TRADEMARKS

Names are used for identification purposes only and may be registered trademarks of their respective companies.

CONTACT US

If you have any questions, please feel free to contact us via email at:

service@icpdas.com, service.icpdas@gmail.com

SUPPORT

This manual relates to the following modules:



PDS-5000 Series Module:

PDS-5105D-MTCP



DS-700/PDS-700 Series Modules:

DS-712, DS-715, PDS-720(D), PDS-721(D), PDS-732(D), PDS-734(D), PDS-742(D), PDS-743(D), PDS-752(D), PDS-755(D), PDS-762(D), PDS-782(D), PDS-782(D)-25.



PDSM-700 Series Modules:

PDSM-721(D), PDSM-732(D), PDSM-734(D), PDSM-742(D), PDSM-743(D), PDSM-752(D), PDSM-755(D), PDSM-762(D), PDSM-782(D).



PPDS-700-MTCP Series Modules:

PPDS-720(D)-MTCP, PPDS-721(D)-MTCP, PPDS-732(D)-MTCP, PPDS-734(D)-MTCP, PPDS-742(D)-MTCP, PPDS-743(D)-MTCP, PPDS-752(D)-MTCP, PPDS-755(D)-MTCP, PPDS-762(D)-MTCP, PPDS-782(D)-MTCP.



PPDSM-700-MTCP Series Modules:

PPDSM-720(D)-MTCP, PPDSM-721(D)-MTCP, PPDSM-732(D)-MTCP, PPDSM-734(D)-MTCP, PPDSM-742(D)-MTCP, PPDSM-743(D)-MTCP, PPDSM-752(D)-MTCP, PPDSM-755(D)-MTCP, PPDSM-762(D)-MTCP, PPDSM-782(D)-MTCP.



PPDS-700-IP67 Series Modules:

PPDS-741-IP67, PPDS-742-IP67, PPDS-743-IP67

TABLE OF CONTENTS

PACKING LIST **7**

MORE INFORMATION **8**

1. INTRODUCTION **9**

1.1 PDS SERIES COMPARISON TABLE 10

1.2 ETHERNET SOLUTIONS 12

1.3 VXCOMM TECHNOLOGY 13

1.4 WEB SERVER TECHNOLOGY 15

2. HARDWARE INFORMATION **16**

2.1 SPECIFICATIONS 16

2.1.1 PDS(M)-700(D)/PPDS(M)-700(D)-MTCP *16*

2.1.2 DS-700 ..... *18*

2.1.3 PDS-5105D-MTCP *19*

2.1.4 PPDS-700-IP67 ..... *20*

2.2 FEATURES 22

2.3 APPEARANCE 23

2.3.1 DS-700/PDS-700(D)/PPDS-700(D)-MTCP *23*

2.3.2 PDSM-700(D)/PPDSM-700(D)-MTCP *24*

2.3.3 PPDS-700-IP67 ..... *25*

2.3.4 PDS-5105D-MTCP *26*

2.4 PIN ASSIGNMENTS 27

2.4.1 PDS-720(D)/PPDS-720(D)-MTCP *27*

2.4.2 PDS(M)-721(D)/PPDS(M)-721(D)-MTCP *28*

2.4.3 PDS(M)-732(D)/PPDS(M)-732(D)-MTCP *29*

2.4.4 PDS(M)-734(D)/PPDS(M)-734(D)-MTCP *30*

2.4.5 PDS(M)-742(D)/PPDS(M)-742(D)-MTCP *31*

2.4.6 PDS(M)-743(D)/PPDS(M)-743(D)-MTCP *32*

2.4.7 PDS(M)-752(D)/PPDS(M)-752(D)-MTCP *33*

2.4.8 PDS(M)-755(D)/PPDS(M)-755(D)-MTCP *34*

2.4.9 PDS(M)-762(D)/PPDS(M)-762(D)-MTCP *35*

2.4.10 PDS(M)-782(D)/PPDS(M)-782(D)-MTCP *36*

2.4.11 PDS-782(D)-25/D6 ..... *37*

2.4.12 DS-712 ..... *38*

2.4.13 DS-715 39
2.4.14 PDS-5105D-MTCP 40
2.4.15 PPDS-700-IP67 41
2.5 WIRING NOTES 43
2.5.1 RS-232 Wiring 43
2.5.2 RS-422 Wiring 44
2.5.3 RS-485 Wiring 44
2.5.4 Digital Output Wiring 45
2.5.5 Digital Input Wiring 45
2.6 DIMENSIONS 46
2.6.1 PDS-700(D)/PPDS-700(D)-MTCP Series 46
2.6.2 PDSM-700(D)/PPDSM-700(D)-MTCP Series 47
2.6.3 PPDS-700-IP67 Series 48
2.6.4 PDS-5105D-MTCP 49
2.7 DIN-RAIL MOUNTING 50
2.8 PDS SERIES DIAGNOSTICS (LED INDICATOR) 52
2.9 INIT/NORMAL OPERATING MODE 57
2.9.1 PDS-700(D)/PPDS-700(D)-MTCP Series 57
2.9.2 DS-700/PDS-782(D)-25 Series 58
2.9.3 PDSM-700(D)/PPDSM-700(D)-MTCP Series 58
2.9.4 PPDS-700-IP67 Series 59
2.9.5 PDS-5105D-MTCP 59
2.10 FLASH PROTECTION FUNCTION 60
2.10.1 PDS-5105D-MTCP Module 60
2.10.2 PDS(M)-700(D)/PPDS(M)-700(D)-MTCP Series 61
2.10.3 DS-700/PDS-782(D)-25 Series 63
2.11 WATERPROOFING ATTACHMENT INSTALLATION FOR PPDS-700-IP67 SERIES 64
2.11.1 Power Plug Installation 64
2.11.2 RJ-45 Plug Installation 67

3. SETTING UP THE PDS SERIES MODULE 71

3.1 CONNECT THE POWER SUPPLY AND THE HOST PC 71
3.2 INSTALL THE VXCOMM UTILITY 75
3.3 CONFIGURING NETWORK SETTINGS 76
3.4 CONFIGURING THE VIRTUAL COM PORTS 77
3.5 TESTING YOUR PDS SERIES MODULE 79

4. WEB CONFIGURATION 81

4.1 LOGGING IN TO THE PDS WEB SERVER 81

4.2 NETWORK SETTINGS 83
4.2.1 Set IP Filter 87
4.3 COM PORT SETTINGS 90
4.3.1 Operation Mode: M0, M1, M2 and M3 94
4.3.2 Set Remote VCOM3 Connection 97
4.4 MODBUS GATEWAY SETTINGS 99
4.5 MISC. SETTINGS 102
4.5.1 Disable the "Web Read Only" Function 103
4.5.2 Change Password 105
4.5.3 Restore to Factory Default Settings 106

5. TYPICAL APPLICATIONS 107

5.1 VIRTUAL COM APPLICATION 107
5.2 ETHERNET I/O APPLICATIONS 108
5.3 LINKING I-7000 TO AN ETHERNET NETWORK 109
5.4 CONFIGURABLE ETHERNET DATA LOGGER 109
5.5 PAIR-CONNECTION APPLICATIONS 111

6. MODBUS TESTING AND PROTOCOL 119

6.1 MODBUS/TCP TO MODBUS/RTU GATEWAY 120
6.2 ACCESS MODBUS DEVICE VIA VIRTUAL COM PORTS 124
6.2.1 How do I disable the M3 Mode (Modbus Gateway) 128

7. VIRTUAL I/O 129

7.1 TESTING THE VIRTUAL I/O 129
7.2 VIRTUAL I/O COMMAND TEST 135
7.3 PROGRAMMING ON A PC CLIENT 137
7.3.1 Open_Com() 140
7.3.2 Close_Com() 140
7.3.3 Send_Receive_Cmd() 141
7.3.4 DCON_Write_DO() 142
7.3.5 DCON_Write_DO_Bit() 143
7.3.6 DCON_Read_DIO() 144

8. VIRTUAL I/O COMMANDS 145

8.1 $AA5 147
8.2 $AA6 148
8.3 $AAC 149
8.4 $AACN 150
8.5 $AAGCN 151

8.6 $AALs 152
8.7 $AAF 153
8.8 $AAM 154
8.9 @AA 155
8.10 @AA(Data) 156
8.11 #AAn 157
8.12 #AA00dd 158
8.13 #AA1ndd 159
8.14 ~** 160
8.15 ~AA0 161
8.16 ~AA1 162
8.17 ~AA2 163
8.18 ~AA3eff 164
8.19 ~AA4P 166
8.20 ~AA4S 167
8.21 ~AA5P 168
8.22 ~AA5S 169
8.23 Application Notes 170

9. CONSOLE/TELNET COMMANDS LIST 172

9.1 Operation Flowchart 172
9.2 Comparison Sheet (Init, Run and Console Modes) 173
9.3 Command List 174
9.3.1 IPFILTER 175
9.3.2 IPCONF 177
9.3.3 SOCKET 178
9.3.4 COM 179
9.3.5 Broadcast 180
9.3.6 SystemTimeout 181
9.3.7 SocketTimeout 182
9.3.8 M 183
9.3.9 EchoCmdNo 184
9.3.10 EndChar 185
9.3.11 IP 186
9.3.12 MASK 186
9.3.13 GATEWAY 187
9.3.14 MAC 187
9.3.15 NAME 188
9.3.16 ALIAS 188

9.3.17 DHCP 189
9.3.18 UDP 190
9.3.19 VER 191
9.3.20 SAVE 191
9.3.21 LOAD 192
9.3.22 CONFIG 194
9.3.23 RESET 195
9.3.24 QUIT 195

10. MODBUS INFORMATION 196

10.1 MODBUS MESSAGE STRUCTURE 196
01 (0x01) Read Coils Status (Readback DOs) 199
02 (0x02) Read Input Status (Read DIs) 201
05 (0x05) Force Single Coil (Write DO) 203
15 (0x0F) Force Multiple Coil (Write DOs) 205
10.2 MODBUS MESSAGE MAP 207

APPENDIX A: LINKING TO A DEVELOPMENT PC 208

APPENDIX B: FRAME GROUND 213

APPENDIX C: GLOSSARY 214

1. ARP (ADDRESS RESOLUTION PROTOCOL) 214
2. CLIENTS AND SERVERS 214
3. ETHERNET 214
4. FIRMWARE 215
5. GATEWAY 215
6. ICMP (INTERNET CONTROL MESSAGE PROTOCOL) 215
7. INTERNET 215
8. IP (INTERNET PROTOCOL) ADDRESS 215
9. MAC (MEDIA ACCESS CONTROL) ADDRESS 216
10. PACKET 216
11. PING 216
12. RARP (REVERSE ADDRESS RESOLUTION PROTOCOL) 216
13. SOCKET 217
14. SUBNET MASK 217
15. TCP (TRANSMISSION CONTROL PROTOCOL) 217
16. TCP/IP 217
17. UDP (USER DATAGRAM PROTOCOL) 217

APPENDIX D: REVISION HISTORY 218

Packing List

The shipping package includes the following items:

Model	Hardware Module 	Quick Start 	CA-0910 Download Cable 	Screw Driver 	Plastic Rack 	Pin Terminal 	Waterproof Power Plug 	Waterproof RJ-45 Connector 
DS-700 Series	 1	1	--	1	1	16	--	--
(P)PDS-700(D) (-MTCP) Series	 1	1	1	1	1	16 or 32 (Note1)	--	--
(P)PDSM-700(D) (-MTCP) Series	 1	1	1	1	1	16 or 32 (Note1)	--	--
PDS-5105D-MTCP	 1	1	1	1	-	32	--	--
PPDS-700-IP67 Series	 1	1	--	-	-	-	1	5

Notes:

1. The pin terminal 16 pcs for PDS(M)-720/PPDS(M)-720-MTCP, and then the pin terminal 32 pcs for other PDS(M)-700/PDS(M)-700-MTCP.

2. If any of these items are missing or damaged, please contact the local distributor for more information. Save the shipping materials and cartons in case you need to ship the module in the future.

3. The IP67 waterproof cable is made by user with required cable length depending on environment. Because of the variable length, so IP67 cable is not included in the shipping box, and only IP67 connectors are included.

More Information

Documentation

- DS/PDS-700 Series :
http://ftp.icpdas.com/pub/cd/8000cd/napdos/pds/ds_pds-700/document/

- PDS-5105D-MTCP :
http://ftp.icpdas.com/pub/cd/8000cd/napdos/pds/pds-5105d/document/

Firmware :

- DS/PDS-700 Series :
http://ftp.icpdas.com/pub/cd/8000cd/napdos/pds/ds_pds-700/firmware/

- PDS-5105D-MTCP :
http://ftp.icpdas.com/pub/cd/8000cd/napdos/pds/pds-5105d/firmware/

OS Image (MiniOS7):

- DS/PDS-700 Series :
http://ftp.icpdas.com/pub/cd/8000cd/napdos/pds/ds_pds-700/OS_image/

- PDS-5105D-MTCP :
http://ftp.icpdas.com/pub/cd/8000cd/napdos/pds/pds-5105d/OS_image/

Demo :

- DS/PDS-700 Series :
http://ftp.icpdas.com/pub/cd/8000cd/napdos/pds/ds_pds-700/demo/

1. Introduction



The PDS series is a family of Programmable Device Servers, also known as "Serial-to-Ethernet gateway", that are designed for linking RS-232/422/485 devices to an Ethernet network. The user-friendly VxComm Driver/Utility allows users to easily turn the built-in COM ports of the PDS series into standard COM ports on a PC. By virtue of its protocol independence, a small-core OS and high flexibility, the PDS series is able to meet the demands of every network-enabled application.

The PDS series includes a powerful and reliable Xserver programming structure that allows you to design your robust Ethernet applications in one day. The built-in, high-performance MiniOS7 boots the PDS up in just one second and gives you fastest responses.

The PPDS(M)-700, PPDS(M)-700-MTCP and PPDS-700-IP67 series features true IEEE 802.3af-compliant (classification, Class 1) Power over Ethernet (PoE) using a standard category 5 Ethernet cable to receive power from a PoE switch like the NS-205PSE.

The PPDS(M)-700-MTCP and PDS-5105D-MTCP also works as a Modbus/TCP to Modbus/RTU gateway that supports most SCADA/HMI communications based on the Modbus/TCP protocol. The PDSM-700 is the PDS-700 with Metal Case (RoHS) and the PPDSM-700-MTCP is the PPDS-700-MTCP with Metal Case (RoHS). Metal Case version includes stronger protection than PDS-700 and PPDS-700-MTCP.

The PPDS-700-IP67 is a special design for the toughest applications. It can be directly mounted to any machine or convenient flat surface. The rugged packaging and IP67 connectors are rated to protect against water, oil, dust, vibration, and much more.

1.1 PDS Series Comparison Table

➢ PDS(M)-700(D)/PPDS(M)-700(D)-MTCP Series Programmable Device Servers

Models						RS-232 RS-485 RS-422/485	DI/DO
	PDS	M	-7 □ □	D			
P	PDS	M	-7 □ □	D	-MTCP		
PoE	Programmable Device Server	Metal		LED Display	Modbus/TCP		
			PDS -720 D PPDS -720 D -MTCP			1 RS-232 1 RS-485	-
			PDS M-721 D PPDS M-721 D -MTCP			1 RS-232 1 RS-485	6/7
			PDS M-732 D PPDS M-732 D -MTCP			2 RS-232 1 RS-485	4/4
			PDS M-734 D PPDS M-734 D -MTCP			1 RS-232 1 RS-485 1 RS-422/485	4/4
			PDS M-742 D PPDS M-742 D -MTCP			3 RS-232 1 RS-485	-
			PDS M-743 D PPDS M-743 D -MTCP			3 RS-232 1 RS-485	4/4
			PDS M-752 D PPDS M-752 D -MTCP			4 RS-232 1 RS-485	-
			PDS M-755 D PPDS M-755 D -MTCP			1 RS-232 4 RS-485	-
			PDS M-762 D PPDS M-762 D -MTCP			5 RS-232 1 RS-485	1/2
			PDS M-782 D PPDS M-782 D -MTCP			7 RS-232 1 RS-485	-
			PPDS M-782 D -25/D6			7 RS-232 1 RS-485	-

Notes:
1. PPDS(M)-700(D)-MTCP supports PoE and Modbus Gateway.
2. **D** versions support 7-segment 5-digit LED display.
3. **M** versions is equipped with metal case.

➢ DS-700 Series Non-Programmable Device Servers

Models					RS-232 RS-485 RS-422/485	DI/DO
-	-	DS	-7 □ □			
-	-	Device Server		Modbus/TCP		
DS -712					1 RS-232	-
DS -715					1 RS-422/485	-

➢ PPDS-700-IP67 Series Programmable Device Servers

Models				RS-232 RS-485 RS-422/485	DI/DO
P	PDS	-7 □ □	-IP67		
PoE	Programmable Device Server		Waterproof Protection		
PPDS -741-IP67				1 RS-232 3 RS-485	-
PPDS -742-IP67				2 RS-232 2 RS-485	-
PPDS -743-IP67				3 RS-232 1 RS-485	-

Notes:
1. **IP67** version is equipped with IP67 case.

➢ PDS-5105D-MTCP Programmable Device Servers

Models				RS-232 RS-485 RS-422/485	DI/DO
PDS	-5 □ □ □	D	-MTCP		
Programmable Device Server		LED Display	Modbus/TCP		
PPDS -5105D -MTCP				1 RS-232 10 RS-485	-

Notes:
1. PPDS-5000(D)-MTCP supports PoE, 2-port Switch and Modbus Gateway.
2. **D** versions support 7-segment 5-digit LED display.

1.2 Ethernet Solutions

Nowadays, the Ethernet protocol has become the foremost standard for local area networks. Connectivity via the Internet is now common in many of the latest applications from home appliances, to vending machines, to testing equipment, to UPS, etc. An Ethernet network can link office automation and industrial control networks, access remote systems and share data and information between machines from multiple vendors, and also provides a cost-effective solution for industrial control networks.

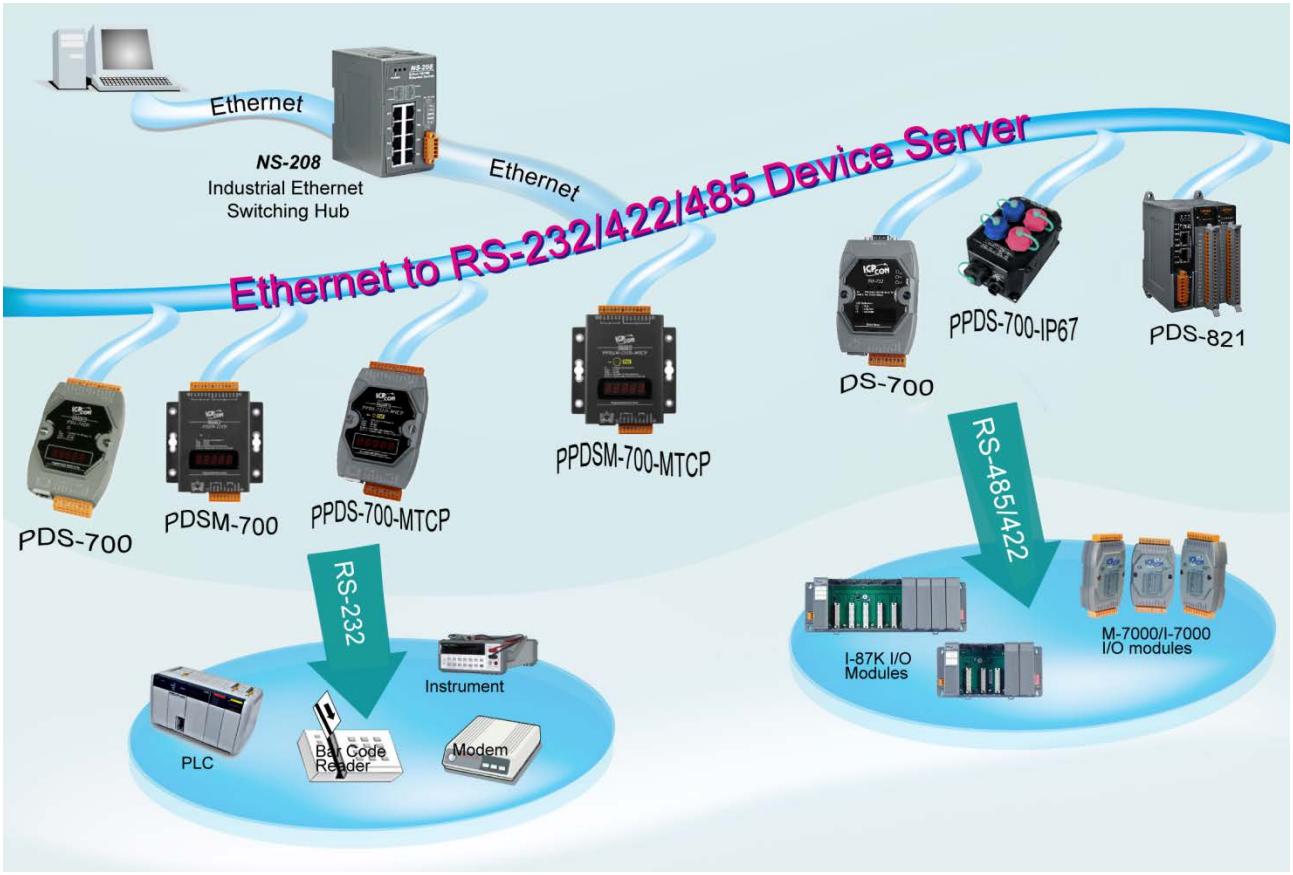

1.3 VxComm Technology

In general, writing a TCP/IP program is more difficult than writing a COM Port program. Another issue is that perhaps the existing the COM Port communication system was built many years ago and is now outdated.

As a result, a new technology, VxComm was developed to virtualize the COM Ports of the PDS series to allow up to 256 COM Ports to be used on a central computer. The VxComm driver saves time when accessing serial devices through the Ethernet without the need for reprogramming the COM Port software on the PC.

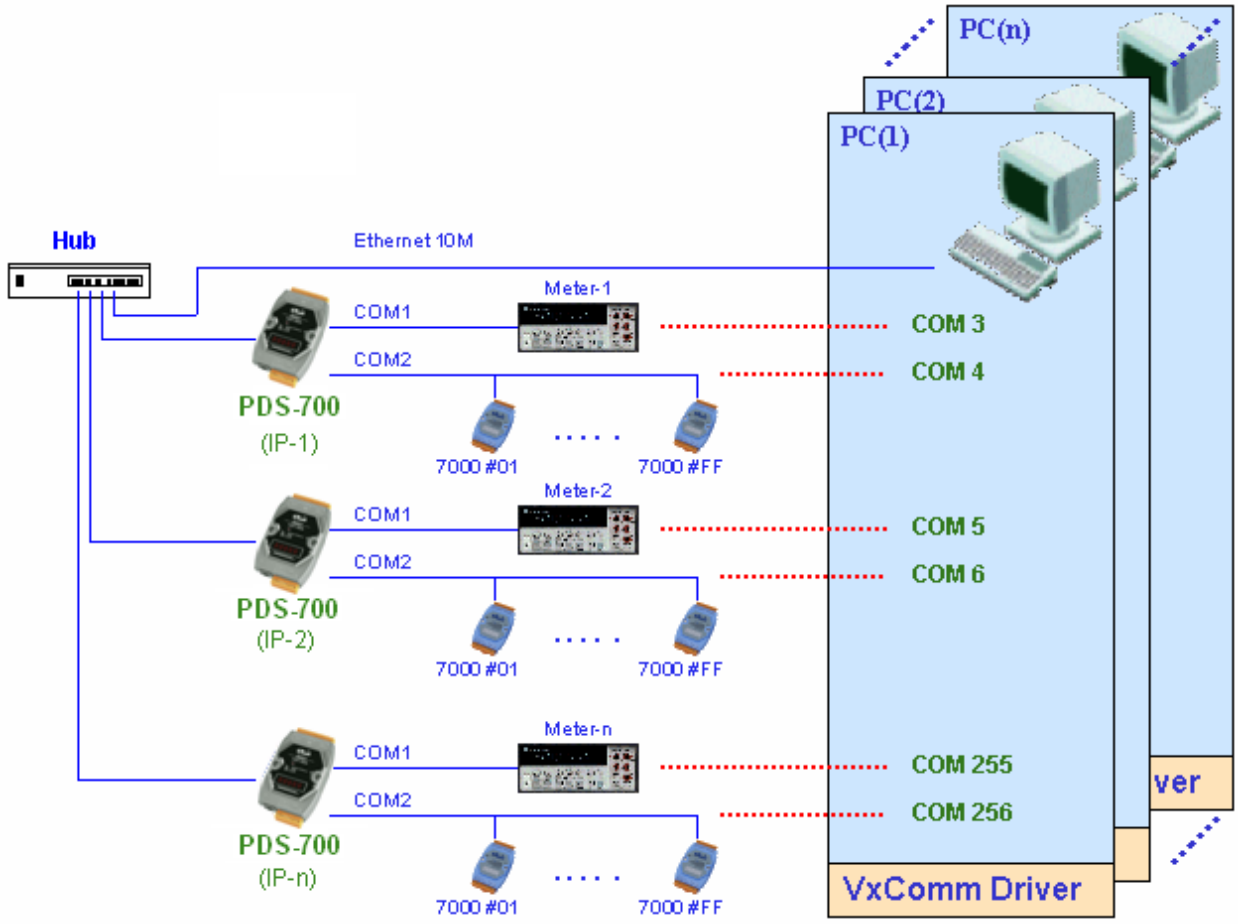

The VxComm driver controls all the details of the Ethernet TCP/IP programming technique, meaning that, with the assistance of PDS series and VxComm technology, your COM Port program will be able to access your serial devices through the Ethernet in the same way as through a COM Port.

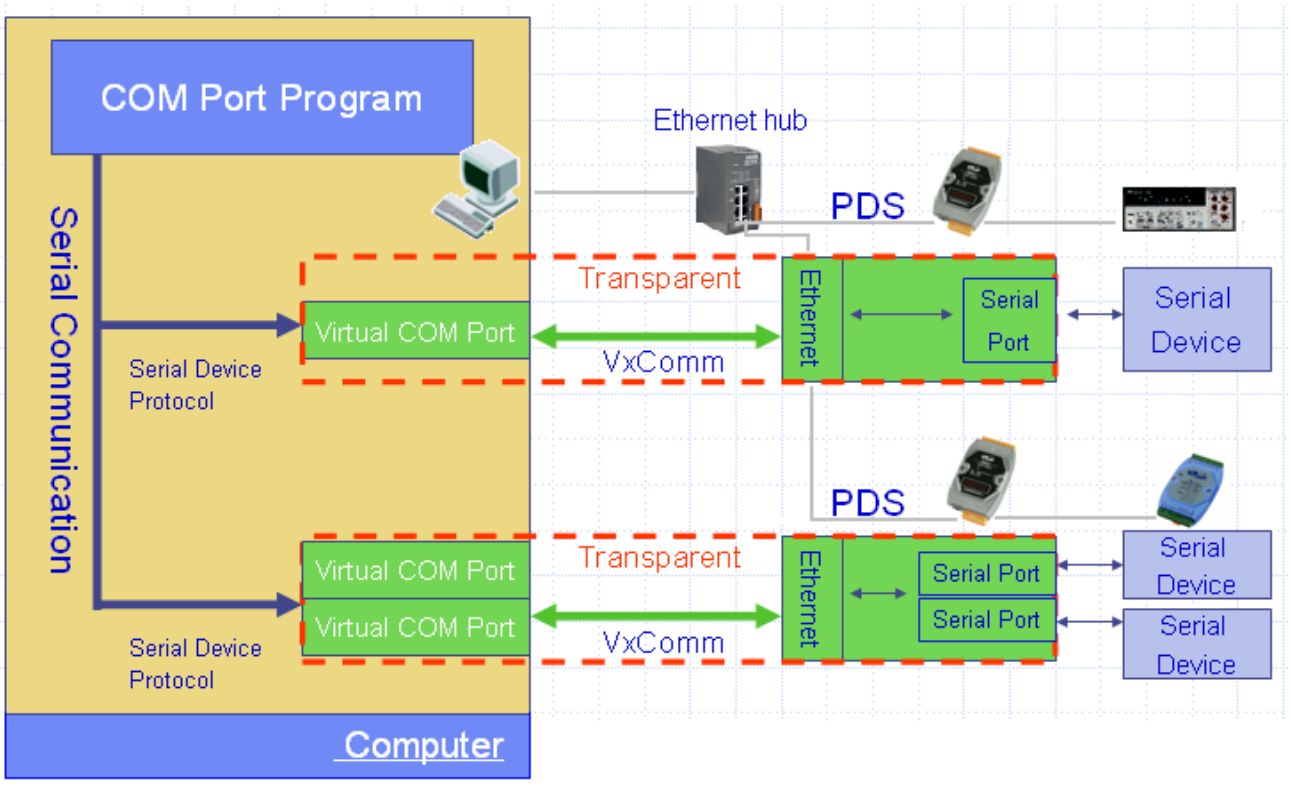

1.4 Web Server Technology

Web server technology enables the PDS series to be configured via a standard web browser interface, e.g. Google Chrome, Internet Explorer, or Firefox, etc. This means that it is easy to check the configuration of the PDS series via an Ethernet network without needing to install any other software tools, thereby reducing the learning curve required for maintaining the device.

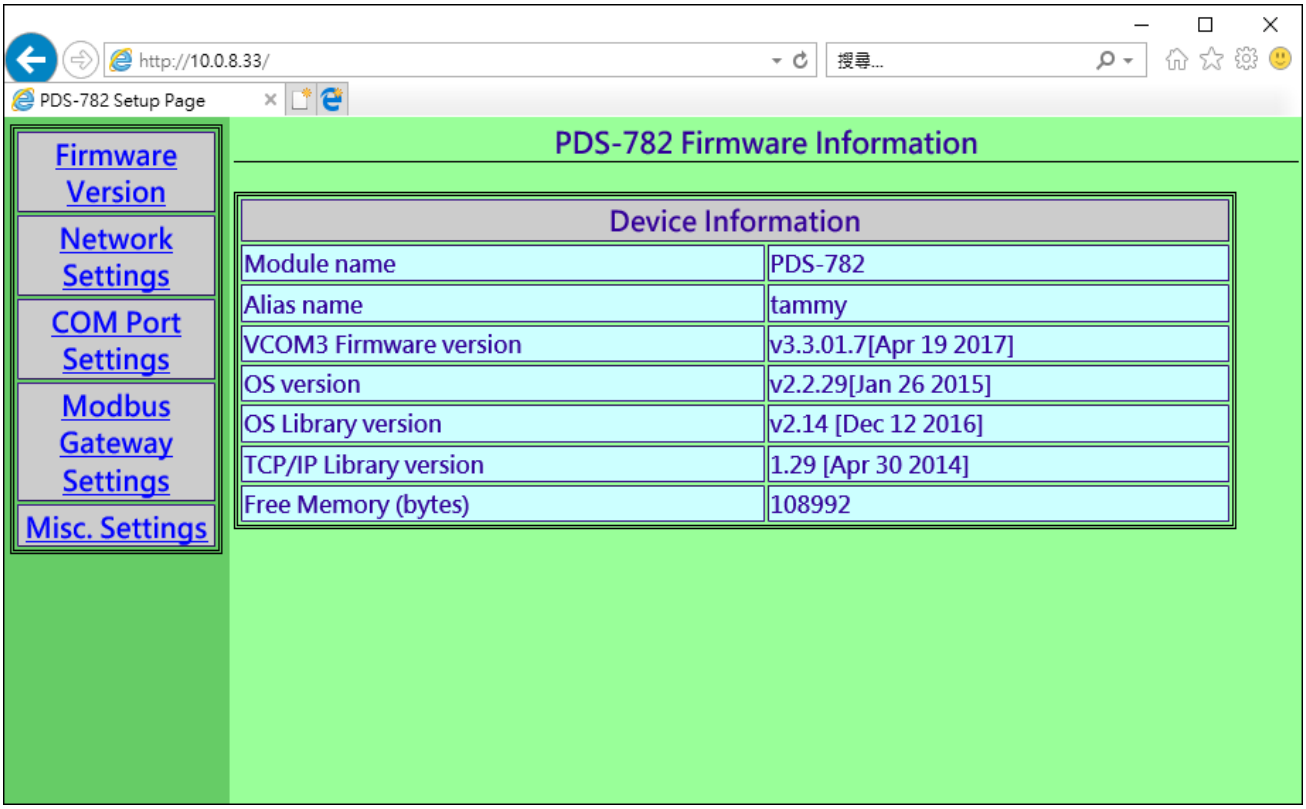

2. Hardware Information

This chapter provides a detailed description of the front panel, the hardware specifications, the pin assignments, the wiring notes and the dimensions for the PDS series.

2.1 Specifications

2.1.1 PDS(M)-700(D)/PPDS(M)-700(D)-MTCP

➢ System Specifications:

Models		PDS(M)-700(D)	PPDS(M)-700(D)-MTCP
CPU			
CPU		80186-80 MHz or compatible	
SRAM		512 KB	
Flash Memory		Flash ROM: 512 KB; Erase unit is one sector (64 KB); 1000,000 erase/write cycles	
EEPROM		16 KB; Data retention:40 years; 1000,000 erase/write cycles	
Built-in Watchdog Timer		Yes	
Communication Interface			
Non-isolated	COM1	RS-232 (TxD, RxD, RTS, CTS, GND)	
	COM2	RS-485 (D2+, D2-, GND)	
Ethernet		10/100 Base-Tx, RJ-45 port (Auto-negotiating, auto MDI/MDI-X, LED indicator)	
PoE		-	IEEE 802.3 af
COM Port Formats			
Data Bit		7,8: for COM1, COM2 5,6,7,8: for COM3 ~ COM4	
Parity		None, Even, Odd, Mark, Space	
Stop Bit		1: for COM, COM2 1,2: for COM3 ~ COM4	
Baud Rate		115200 bps Max.	
LED Indicators			
5-digit 7 Segment		Yes (Display for “D”) versions	
System		Red	
PoE		-	Green
Power			
Protection		Power Reverse Polarity Protection	
Required Supply Voltage		+10 VDC ~ +30 VDC (non-regulated)	+12 VDC ~+48 VDC (non-regulated) PoE (IEEE 802.3af, Class 1)
Power Consumption		PDS(M)-700: 2.0 W PDS(M)-700D: 2.7 W	PPDS(M)-700-MTCP: 2.2 W PPDS(M)-700D-MTCP: 2.9 W

➢ I/O Specifications:

Models		PDS(M)-700(D)	PPDS(M)-700(D)-MTCP
Digital Output			
Output Type		Open Collector (Sink/NPN)	
Load Voltage		30 VDC max.	
Load Current		100 mA max.	
Isolated Voltage		Non-isolated	
Digital Input			
Input Type		Source (Dry Type), Common Ground	
Off Voltage Level		+1 V max.	
On Voltage Level		+3.5 V ~ +30 V	
Isolated Voltage		Non-isolated	
Counter	Max. Count	16-bit (65535)	
	Max. Input Frequency	100 Hz	
	Min. Pulse Width	5 ms	

2.1.2 DS-700

➢ System Specifications:

Models	DS-700
CPU	
CPU	80186-80 MHz or compatible
SRAM	512 KB
Flash Memory	Flash ROM: 512 KB; Erase unit is one sector (64 KB); 1000,000 erase/write cycles
EEPROM	16 KB; Data retention: 40 years; 1000,000 erase/write cycles
Built-in Watchdog Timer	Yes
COM Port Formats	
Data Bit	7,8
Parity	None, Even, Odd, Mark, Space
Stop Bit	1
Baud Rate	115200 bps Max.
LED Indicators	
L1	Run (Red)
L2	Link/Act (Red)
L3	10/100 M (Orange)
Power	
Protection	Power Reverse Polarity Protection
Required Supply Voltage	+12 VDC ~ +48 VDC (non-regulated)
Power Consumption	2.0 W

➢ Communication Interface:

Models		DS-712
Non-isolated	COM1	RS-232 (TxD, RxD, RTS, CTS, GND)
Ethernet		10/100 Base-TX, RJ-45 Port (Auto-negotiating, auto MDI/MDI-X, LED indicator)
Models		**DS-715**
Isolated (2000 Vrms)	COM1	RS-422 (TxD+, TxD-, RxD+, RxD-) RS-485 (D2+, D2-)
RS-485	Bias Resistor	Yes, 1 KΩ
	Node	245 (max.)
Ethernet		10/100 Base-Tx, RJ-45 port (Auto-negotiating, auto MDI/MDI-X, LED indicator)

2.1.3 PDS-5105D-MTCP

CPU		
CPU		80186 or compatible (16-bit and 80 MHz)
SRAM		512 KB
Flash Memory		512 KB; Erase unit is one sector (64 KB); 1000,000 erase/write cycles
EEPROM		16 KB
Watchdog Timer		Yes (0.8 seconds)
Communication Ports		
Non-isolated	COM1	RS-232 (TxD, RxD, GND)/RS-485(D1+,D1-), Self-tuner ASIC inside
	COM2~10	RS-485 (Dx+, Dx-), Self-tuner ASIC inside
RS-485	Bias Resistor	Yes, 1 KΩ
	Node	254 (max.)
Ethernet		2-port 10/100 Base-Tx Ethernet Switch with LAN Bypass, RJ-45 x2 (Auto-negotiating, auto MDI/MDI-X, LED indicator)
COM Port Formats		
Data Bit		7,8: for COM1, COM2 5,6,7,8: for COM3 ~ COM10
Parity		None, Even, Odd, Mark, Space
Stop Bit		1,2: for COM1 ~ COM10
Baud Rate		115200 bps Max. @ 10 Ports, half-duplex, 80% loading
LED Indicators		
5-digit 7 Segment		Yes
System		Red
Mechanical		
Dimensions (W x H x D)		91 mm x 132 mm x 52 mm
Installation		DIN-Rail
Case		Fire-Retardant Plastic (UL94-V0 Level)
Environmental		
Operating Temperature		-25° ~ 75°C
Storage Temperature		-30° ~ 85°C
Humidity		10 ~ 90% RH, non-condensing
Power Consumption		0.05 A @ 24 V_{DC}
Power		
Protection		Power reverse polarity protection
Frame GND		Yes (for EMS Protection)
Input Range		+12 ~+48 V_{DC} (non-regulated)
Power Consumption		4.8 W

2.1.4 PPDS-700-IP67

Models		PPDS-741-IP67	PPDS-742-IP67	PPDS-743-IP67
CPU				
CPU		80186-80 MHz or compatible		
SRAM		512 KB		
Flash Memory		Flash ROM: 512 KB; Erase unit is one sector (64 KB); 1000,000 erase/write cycles		
EEPROM		16 KB; Data retention:40 years; 1000,000 erase/write cycles		
Built-in Watchdog Timer		Yes		
Communication Interface				
COM1		5-wire RS-232		
COM2		2-wire Isolated RS-485		
COM3		2-wire Isolated RS-485	5-wire RS-232	5-wire RS-232
COM4		2-wire Isolated RS-485	2-wire Isolated RS-485	5-wire RS-232
RS-485	Bias Resistor	Yes, 1 KΩ		
	Node	245 (max.)		
Ethernet		10/100 Base-Tx, RJ-45 port (Auto-negotiating, auto MDI/MDI-X, LED indicator)		
PoE		IEEE 802.3 af		
COM Port Formats				
Data Bit		7,8: for COM1, COM2 5,6,7,8: for COM3 ~ COM4		
Parity		None, Even, Odd, Mark, Space		
Stop Bit		1: for COM, COM2 1,2: for COM3 ~ COM4		
Baud Rate		115200 bps Max.		
LED Indicators				
Ethernet		Green: 10/100 M (E1), Orange: Link/Act (E1)		
System		Red: Sys, PoE		
COM1~COM4		Green: RxD, Orange: TxD		
Power				
Protection		Power Reverse Polarity Protection		
Required Supply Voltage		+12 VDC ~+48 VDC (non-regulated) PoE (IEEE 802.3af, Class 1)		
Power Consumption		2.2 W		

Models	PPDS-741-IP67	PPDS-742-IP67	PPDS-743-IP67
Mechanical			
Flammability	Fire-Retardant Materials (UL94-V0 Level)		
Casing	Plastic casing with IP67 waterproof protection		
Dimensions (W x H x D)	85 mm x 76 mm x 137 mm (89 mm x 90 mm x 138 mm for /DIN versions)		
Installation	Wall mounting (DIN-Rail mounting for /DIN versions)		
Environment			
Operating Temperature	-10 °C ~ +60 °C		
Storage Temperature	-10 °C ~ +60 °C		
Humidity	100% RH for operating temperature -10 °C ~ +60 °C		
Notes: 5-wire RS-232: TxD, RxD, CTS, RTS, GND Isolated 2-wire RS-485: DATA+, DATA-, GND; Self-Tuner Inside; 2500 Vrms Isolation			

2.2 Features

- Incorporates serial devices in an Ethernet network
- Provides Virtual COM for 32-bit and 64-bit Windows XP/7/8/2012/10
- Supports Modbus TCP to RTU/ASCII Gateway
- Powerful programmable device server with lib and sample programs
- Built-in high performance MiniOS7 from ICP DAS
- Built-in watchdog timer suitable for use in harsh environments
- Built-in Self-Tuner on RS-485 Ports (automatic direction control)
- Supports +/- 4 kV ESD protection on serial ports
- Supports +/- 2 kV ESD protection on serial ports (for PDS-5105D-MTCP)
- Power reverse polarity protection and low power consumption
- 10/100 Base-TX Ethernet, RJ-45 Port (Auto-negotiating, auto MDI/MDI-X, LED indicator)
- 2-Port 10/100 Base-TX Ethernet Switch with LAN Bypass (for PDS-5105D-MTCP)
- Supports PoE (Power over Ethernet, for PPDS versions)
- Built-in 7-Segment 5-digit LED display (for D versions)
- Supports D/I, latched D/I and counter functions (for models with DIO)
- Supports Virtual I/O technology (for models with DIO)
- Rugged RJ-45 Connector for anti-vibration and shock (for IP67 Versions)
- Plastic Casing with IP67 Waterproof (for IP67 Versions)
- Supports IP filter (White List) for security control
- Supports multi-client and data sharing function
- Palm-size form factor with multiple serial ports and DIN-Rail mounting
- RoHS Compliant & no Halogen
- OEM/ODM service is available

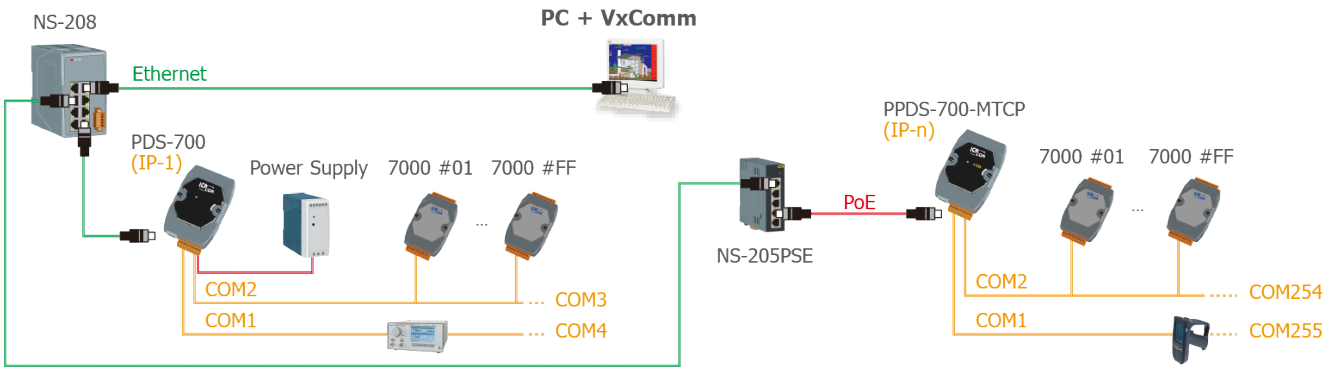

2.3 Appearance

2.3.1 DS-700/PDS-700(D)/PPDS-700(D)-MTCP

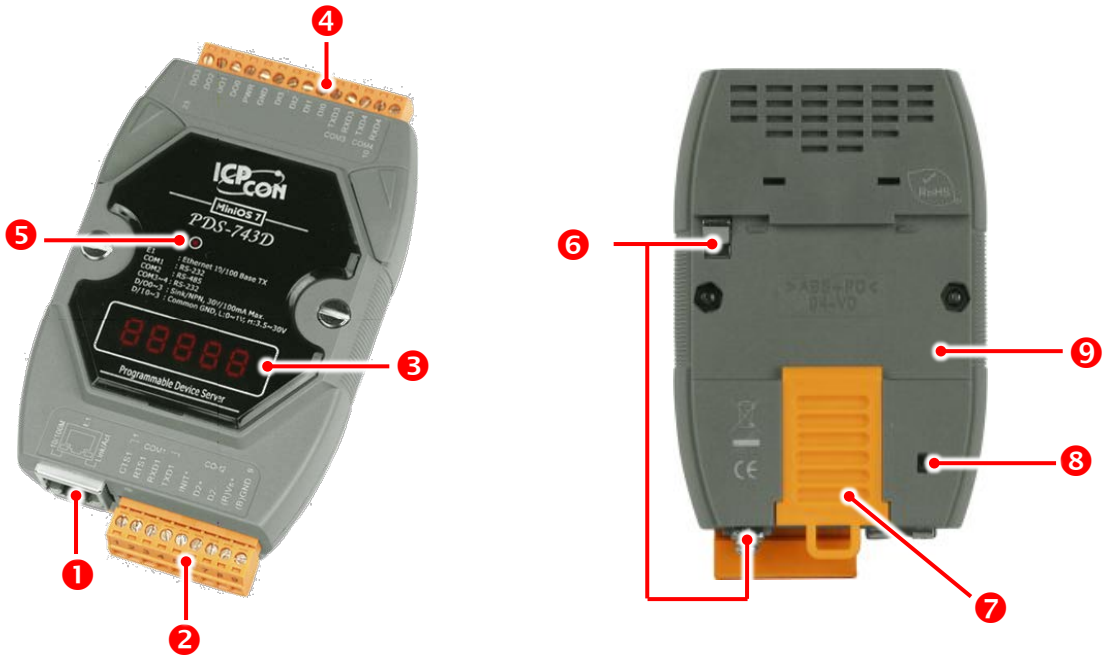

No.	Description	No.	Description
1	RJ-45 Jack for 10/100 M Ethernet and PoE (Power over Ethernet, for PPDS versions)	6	Frame Ground
2	COM1: RS-232 (Command Port) COM2: RS-485 DC Power Input (Vs+, GND)	7	DIN-Rail Lock
3	7-Segment 5-digit LED display (for D versions), refer to Section 2.8 for detail information.	8	Init/Normal Operating Mode. Refer to Section 2.9 for detail information.
4	The number of serial COM Ports available depends on the type of PDS series. Refer to Section 2.4 for detail information.	9	DIN-Rail Mounting. Refer to Section 2.7 for detail information.
5	System LED indicator, refer to Section 2.8 for detail information.		

2.3.2 PDSM-700(D)/PPDSM-700(D)-MTCP

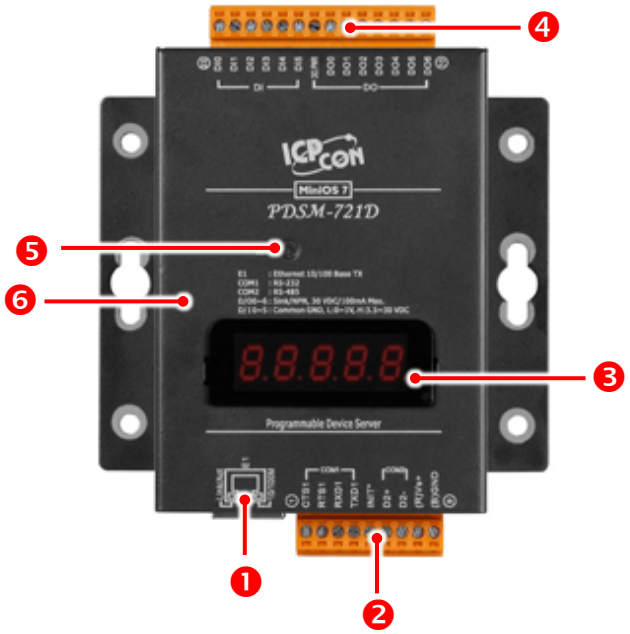

No.	Description	No.	Description
1	RJ-45 Jack for 10/100 M Ethernet and PoE (Power over Ethernet, for PPDSM versions)	4	The number of serial COM Ports available depends on the type of PDS series. Refer to Section 2.4 for detail information.
2	COM1: RS-232 (Command Port) COM2: RS-485 DC Power Input (Vs+, GND)	5	System LED indicator, refer to Section 2.8 for detail information.
3	7-Segment 5-digit LED display (for D versions), refer to Section 2.8 for detail information.	6	Metal case

2.3.3 PPDS-700-IP67

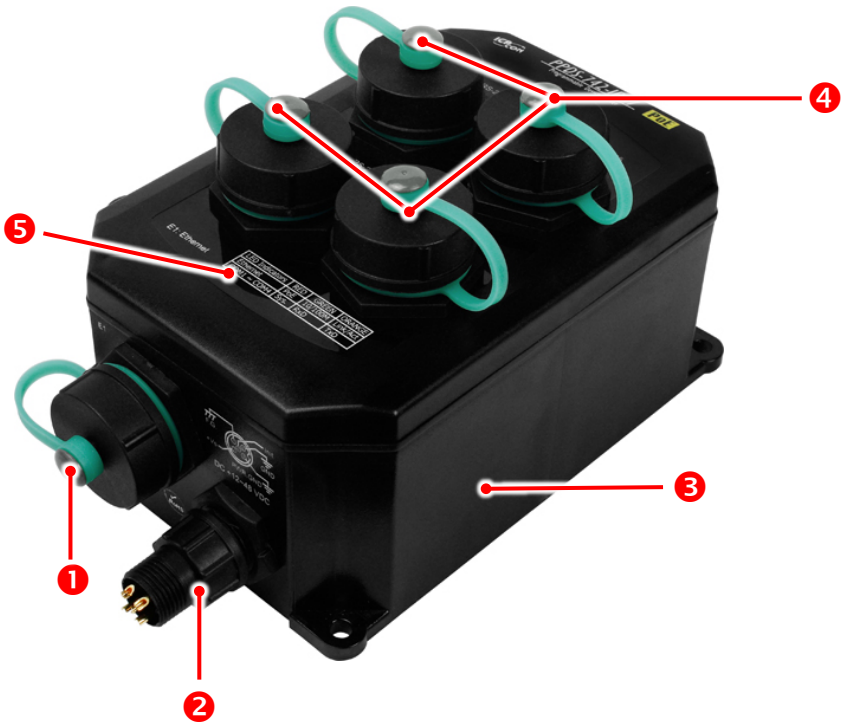

No.	Description	No.	Description
1	RJ-45 Jack for 10/100 M Ethernet and PoE (Power over Ethernet)	4	The number of serial COM Ports available depends on the type of PPDS-700-IP67 series. Refer to Section 2.4.15 for detail information.
2	DC Power Input (Vs+, GND), refer to Section 2.4.15 for detail information.	5	LED Display Information. Refer to Section 2.4.15 for detail information.
3	Plastic casing with IP67 Waterproof		

2.3.4 PDS-5105D-MTCP

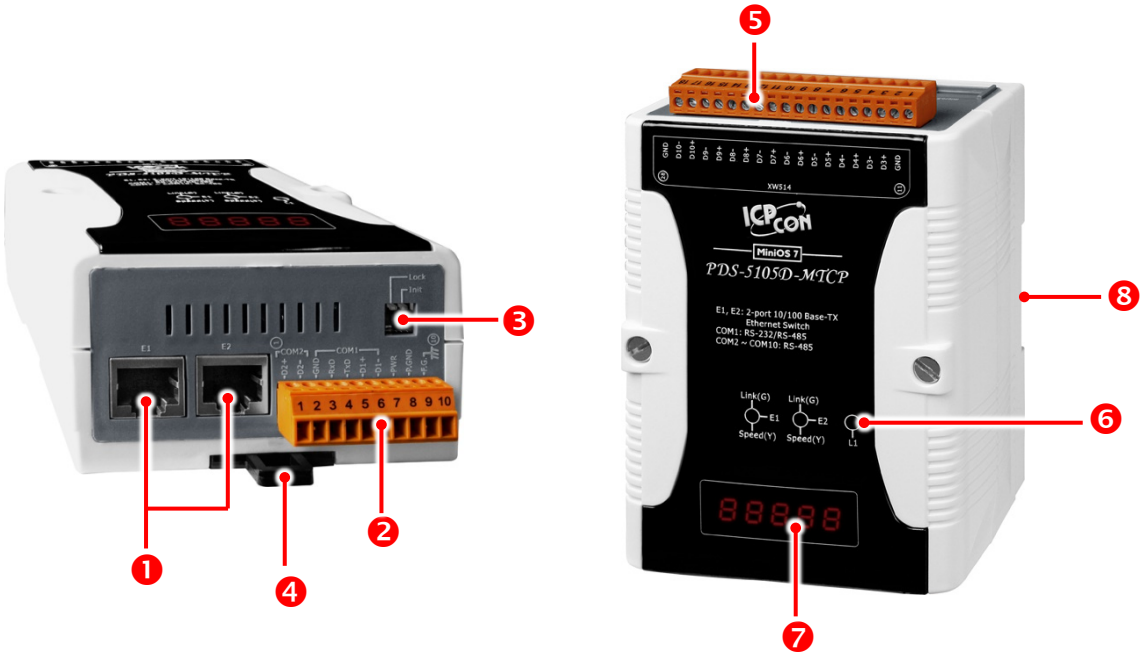

No.	Description	No.	Description
1	2-Port 10/100 Base-TX Ethernet Switch with LAN Bypass	5	Serial COM Ports. Refer to Section 2.4.14 for detail information.
2	COM1: RS-232 (Command Port) COM2: RS-485 DC Power Input (PWR, GND)	6	Ethernet and System LED indicator.
3	Init/Normal Operating Mode. Refer to Section 2.9.5 for detail information.	7	7-Segment 5-digit LED display (for D versions), refer to Section 2.8 for detail information.
4	DIN-Rail Lock	8	DIN-Rail Mounting. Refer to Section 2.7 for detail information.

2.4 Pin Assignments

2.4.1 PDS-720(D)/PPDS-720(D)-MTCP



Terminal No.		Pin Assignment
E1		
COM1	01	CTS1
	02	RTS1
	03	RxD1
	04	TxD1
	05	INIT*
COM2	06	D2+
	07	D2-
	08	(R)+Vs
	09	(B)GND

INIT*	Initialization pin (for enabling/disabling AUTOEXEC.BAT)
(R)Vs+	V+ Pin for the power supply. PDS-700(D) series: +10 ~ +30 V_{DC} unregulated; PPDS-700(D)-MTCP series: +12 ~ +48 V_{DC} unregulated
(B)GND	GND Pin for the power supply (COM1 GND)

2.4.2 PDS(M)-721(D)/PPDS(M)-721(D)-MTCP

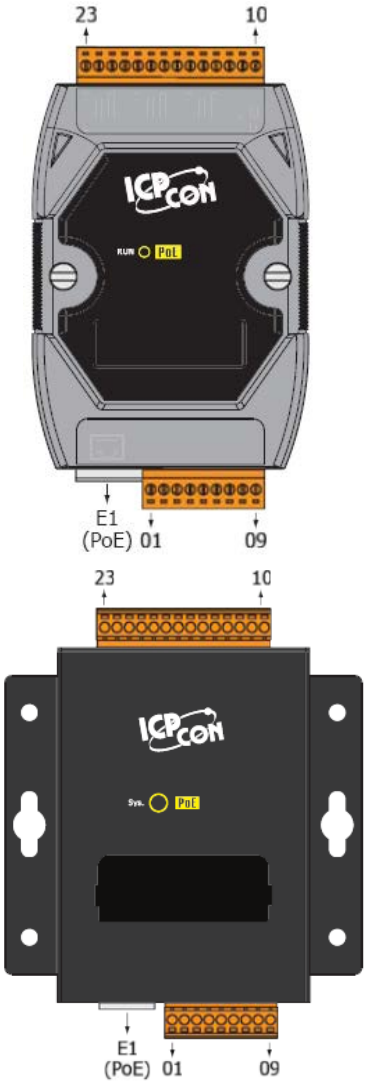

Terminal No.		Pin Assignment
E1		Link/Act 10/100M
COM1	01	CTS1
	02	RTS1
	03	RxD1
	04	TxD1
	05	INIT*
COM2	06	D2+
	07	D2-
	08	(R)+Vs
	09	(B)GND

Terminal No.		Pin Assignment
DI	23	DI0
	22	DI1
	21	DI2
	20	DI3
	19	DI4
	18	DI5
DO	17	DO.PWR
	16	DO0
	15	DO1
	14	DO2
	13	DO3
	12	DO4
	11	DO5
	10	DO6

INIT*	Initialization pin (for enabling/disabling AUTOEXEC.BAT)
(R)Vs+	V+ Pin for the power supply. PDS(M)-700(D) series: +10 ~ +30 V_{DC} unregulated; PPDS(M)-700(D)-MTCP series: +12 ~ +48 V_{DC} unregulated
(B)GND	GND Pin for the power supply (COM1 GND)
DO.PWR	Power Input for Digital Output.

2.4.3 PDS(M)-732(D)/PPDS(M)-732(D)-MTCP

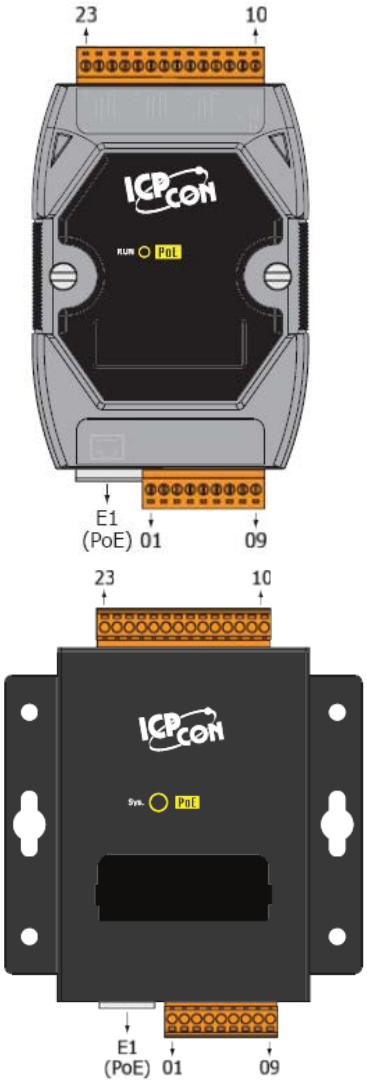

Terminal No.		Pin Assignment
E1		Link/Act 10/100M
COM1	01	CTS1
	02	RTS1
	03	RxD1
	04	TxD1
	05	INIT*
COM2	06	D2+
	07	D2-
	08	(R)+Vs
	09	(B)GND

Terminal No.		Pin Assignment
DO	23	DO3
	22	DO2
	21	DO1
	20	DO0
	19	DO.PWR
	18	GND
DI	17	DI3
	16	DI2
	15	DI1
	14	DI0
COM3	13	RxD3
	12	TxD3
	11	RTS3
	10	CTS3

INIT*	Initialization pin (for enabling/disabling AUTOEXEC.BAT)
(R)Vs+	V+ Pin for the power supply. PDS(M)-700(D) series: +10 ~ +30 V_{DC} unregulated; PPDS(M)-700(D)-MTCP series: +12 ~ +48 V_{DC} unregulated
(B)GND	GND Pin for the power supply (COM1 GND)
DO.PWR	Power Input for Digital Output.

2.4.4 PDS(M)-734(D)/PPDS(M)-734(D)-MTCP

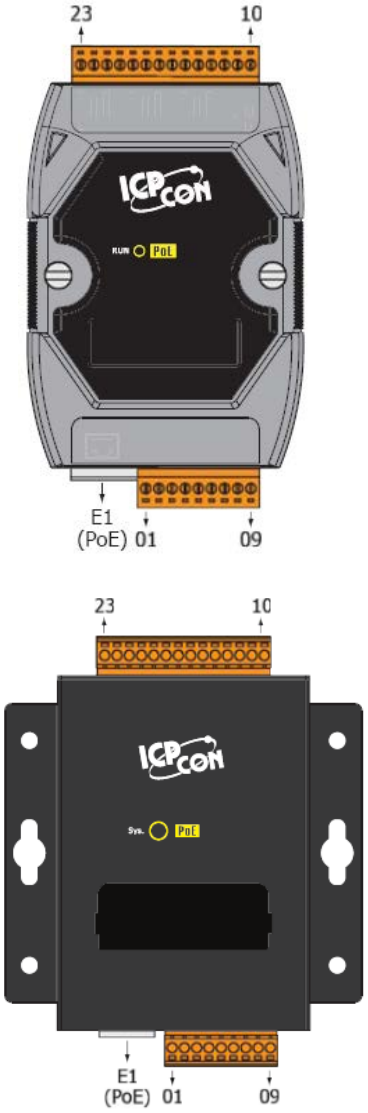

Terminal No.		Pin Assignment
E1		Link/Act 10/100M
COM1	01	CTS1
	02	RTS1
	03	RxD1
	04	TxD1
	05	INIT*
COM2	06	D2+
	07	D2-
	08	(R)+Vs
	09	(B)GND

Terminal No.		Pin Assignment
DO	23	DO3
	22	DO2
	21	DO1
	20	DO0
	19	DO.PWR
	18	GND
DI	17	DI3
	16	DI2
	15	DI1
	14	DI0
COM3	13	RxD3-
	12	RxD3+
	11	TxD3-/D3-
	10	TxD3+/D3+

INIT*	Initialization pin (for enabling/disabling AUTOEXEC.BAT)
(R)Vs+	V+ Pin for the power supply. PDS(M)-700(D) series: +10 ~ +30 V_{DC} unregulated; PPDS(M)-700(D)-MTCP series: +12 ~ +48 V_{DC} unregulated
(B)GND	GND Pin for the power supply (COM1 GND)
DO.PWR	Power Input for Digital Output.

2.4.5 PDS(M)-742(D)/PPDS(M)-742(D)-MTCP





Terminal No.		Pin Assignment
E1		Link/Act 10/100M
COM1	01	CTS1
	02	RTS1
	03	RxD1
	04	TxD1
	05	INIT*
COM2	06	D2+
	07	D2-
	08	(R)+Vs
	09	(B)GND

Terminal No.		Pin Assignment
COM4	23	DI4
	22	DCD4
	21	DTR4
	20	DSR4
	19	CTS4
	18	RTS4
	17	TxD4
	16	RxD4
	15	GND4
COM3	14	GND3
	13	RxD3
	12	TxD3
	11	RTS3
	10	CTS3

INIT*	Initialization pin (for enabling/disabling AUTOEXEC.BAT)
(R)Vs+	V+ Pin for the power supply. PDS(M)-700(D) series: +10 ~ +30 V_{DC} unregulated; PPDS(M)-700(D)-MTCP series: +12 ~ +48 V_{DC} unregulated
(B)GND	GND Pin for the power supply (COM1 GND)

2.4.6 PDS(M)-743(D)/PPDS(M)-743(D)-MTCP





Terminal No.		Pin Assignment
E1		Link/Act 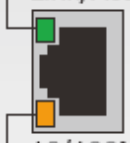 10/100M
COM1	01	CTS1
	02	RTS1
	03	RxD1
	04	TxD1
	05	INIT*
COM2	06	D2+
	07	D2-
	08	(R)+Vs
	09	(B)GND

Terminal No.		Pin Assignment
DO	23	DO3
	22	DO2
	21	DO1
	20	DO0
	19	DO.PWR
	18	GND
DI	17	DI3
	16	DI2
	15	DI1
	14	DI0
COM3	13	TxD3
	12	RxD3
COM4	11	TxD4
	10	RxD4

INIT*	Initialization pin (for enabling/disabling AUTOEXEC.BAT)
(R)Vs+	V+ Pin for the power supply. PDS(M)-700(D) series: +10 ~ +30 V_{DC} unregulated; PPDS(M)-700(D)-MTCP series: +12 ~ +48 V_{DC} unregulated
(B)GND	GND Pin for the power supply (COM1 GND)
DO.PWR	Power Input for Digital Output.

2.4.7 PDS(M)-752(D)/PPDS(M)-752(D)-MTCP

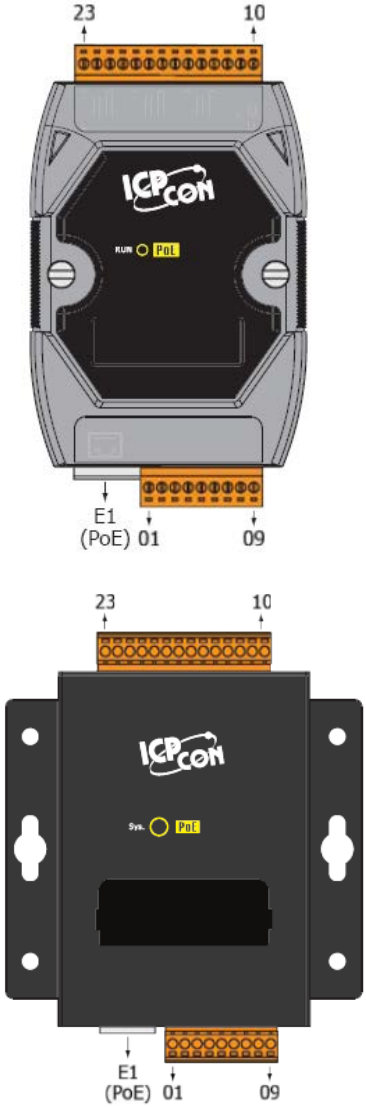

Terminal No.		Pin Assignment
E1		Link/Act 10/100M
COM1	01	CTS1
	02	RTS1
	03	RxD1
	04	TxD1
	05	INIT*
COM2	06	D2+
	07	D2-
	08	(R)+Vs
	09	(B)GND

Terminal No.		Pin Assignment
COM5	23	RxD5
	22	TxD5
	21	RTS5
	20	CTS5
	19	GND
COM4	18	RxD4
	17	TxD4
	16	RTS4
	15	CTS4
	14	GND
COM3	13	RxD3
	12	TxD3
	11	RTS3
	10	CTS3

INIT*	Initialization pin (for enabling/disabling AUTOEXEC.BAT)
(R)Vs+	V+ Pin for the power supply. PDS(M)-700(D) series: +10 ~ +30 V_{DC} unregulated; PPDS(M)-700(D)-MTCP series: +12 ~ +48 V_{DC} unregulated
(B)GND	GND Pin for the power supply (COM1 GND)

2.4.8 PDS(M)-755(D)/PPDS(M)-755(D)-MTCP





Terminal No.		Pin Assignment
E1		Link/Act 10/100M
COM1	01	CTS1
	02	RTS1
	03	RxD1
	04	TxD1
	05	INIT*
COM2	06	D2+
	07	D2-
	08	(R)+Vs
	09	(B)GND

Terminal No.		Pin Assignment
COM5	23	DATA+
	22	DATA-
	21	--
	20	--
	19	--
	18	--
COM4	17	DATA+
	16	DATA-
	15	--
	14	--
	13	--
	12	--
COM3	11	DATA+
	10	DATA-

INIT*	Initialization pin (for enabling/disabling AUTOEXEC.BAT)
(R)Vs+	V+ Pin for the power supply. PDS(M)-700(D) series: +10 ~ +30 V_{DC} unregulated; PPDS(M)-700(D)-MTCP series: +12 ~ +48 V_{DC} unregulated
(B)GND	GND Pin for the power supply (COM1 GND)

2.4.9 PDS(M)-762(D)/PPDS(M)-762(D)-MTCP





Terminal No.		Pin Assignment
E1		Link/Act  10/100M
COM1	01	CTS1
	02	RTS1
	03	RxD1
	04	TxD1
	05	INIT*
COM2	06	D2+
	07	D2-
	08	(R)+Vs
	09	(B)GND

Terminal No.		Pin Assignment
DO	23	DO0
	22	DO1
	21	DO.PWR
DI	20	DI0
	19	GND
COM6	18	TxD6
	17	RxD6
COM5	16	TxD5
	15	RxD5
	14	GND
COM4	13	TxD4
	12	RxD4
COM3	11	TxD3
	10	RxD3

INIT*	Initialization pin (for enabling/disabling AUTOEXEC.BAT)
(R)Vs+	V+ Pin for the power supply. PDS(M)-700(D) series: +10 ~ +30 V_{DC} unregulated; PPDS(M)-700(D)-MTCP series: +12 ~ +48 V_{DC} unregulated
(B)GND	GND Pin for the power supply (COM1 GND)
DO.PWR	Power Input for Digital Output.

2.4.10 PDS(M)-782(D)/PPDS(M)-782(D)-MTCP





Terminal No.		Pin Assignment
E1		Link/Act 10/100M
COM1	01	CTS1
	02	RTS1
	03	RxD1
	04	TxD1
	05	INIT*
COM2	06	D2+
	07	D2-
	08	(R)+Vs
	09	(B)GND

Terminal No.		Pin Assignment
COM8	23	TxD8
	22	RxD8
COM7	21	TxD7
	20	RxD7
	19	GND
COM6	18	TxD6
	17	RxD6
COM5	16	TxD5
	15	RxD5
	14	GND
COM4	13	TxD4
	12	RxD4
COM3	11	TxD3
	10	RxD3

INIT*	Initialization pin (for enabling/disabling AUTOEXEC.BAT)
(R)Vs+	V+ Pin for the power supply. PDS(M)-700(D) series: +10 ~ +30 V_{DC} unregulated; PPDS(M)-700(D)-MTCP series: +12 ~ +48 V_{DC} unregulated
(B)GND	GND Pin for the power supply (COM1 GND)

2.4.11 PDS-782(D)-25/D6

Pin Assignment	Terminal No.	Pin Assignment
N/A	01	
N/A	02	14 COM8_RxD
GND	03	15 COM8_TxD
N/A	04	16 COM7_RxD
GND	05	17 COM7_TxD
N/A	06	18 COM6_RxD
GND	07	19 COM6_TxD
N/A	08	20 COM5_RxD
GND	09	21 COM5_TxD
N/A	10	22 COM4_RxD
GND	11	23 COM4_TxD
N/A	12	24 COM3_RxD
GND	13	25 COM3_TxD
		Shield F.G.



25-Pin Male D-Sub Connector

Pin Assignment	Terminal No.	Pin Assignment
GND	05	
--	04	09 --
TxD	03	08 --
RxD	02	07 --
--	01	06 --

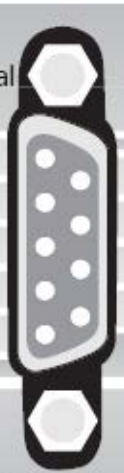

RS-232 Female DB-25 to Male DB-9 Connector

2.4.12 DS-712



Terminal No.	Pin Assignment
E1	
01	N/A
02	N/A
03	N/A
04	N/A
05	INIT*
06	N/A
07	N/A
08	(R)+Vs
09	(B)GND

Pin Assign-ment	Terminal No.	Pin Assign-ment
GND	05	
--	04	09 --
TxD	03	08 CTS
RxD	02	07 RTS
--	01	06 --



COM1: Male DB-9 Connector

INIT*	Initialization pin (for enabling/disabling AUTOEXEC.BAT)
(R)Vs+	V+ Pin for the power supply (+12 ~ +48 V_{DC} unregulated)
(B)GND	GND Pin for the power supply (COM1 GND)

2.4.13 DS-715



Terminal No.	Pin Assignment
E1	
01	N/A
02	N/A
03	N/A
04	N/A
05	INIT*
06	N/A
07	N/A
08	(R)+Vs
09	(B)GND

COM1 (RS-422/485)
F.G.
Tx+/D+
Tx-/D-
Rx+
Rx-

INIT*	Initialization pin (for enabling/disabling AUTOEXEC.BAT)
(R)Vs+	V+ Pin for the power supply (+12 ~ +48 V_{DC} unregulated)
(B)GND	GND Pin for the power supply (COM1 GND)

2.4.14 PDS-5105D-MTCP

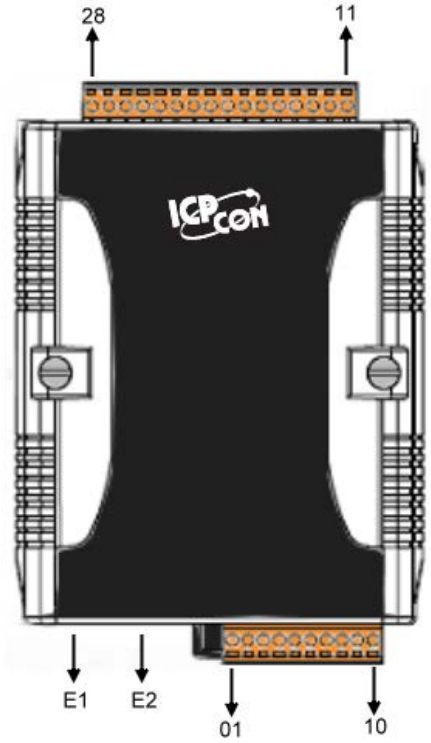

Terminal No.		Pin Assignment
E1		Link/Act 10/100M
E2		Link/Act 10/100M
COM2	01	D2+
	02	D2-
COM1	03	GND
	04	RxD
	05	TxD
	06	D1+
	07	D1-
	08	PWR
	09	P.GND
	10	F.G.

Terminal No.		Pin Assignment
	28	GND
COM10	27	D10-
	26	D10+
COM9	25	D9-
	24	D9+
COM8	23	D8-
	22	D8+
COM7	21	D7-
	20	D7+
COM6	19	D6-
	18	D6+
COM5	17	D5-
	16	D5+
COM4	15	D4-
	14	D4+
COM3	13	D3-
	12	D3+
	11	GND

PWR	V+ pin for the power supply (+12 ~ +48 V_{DC} unregulated)
P.GND	GND pin for the power supply
F.G.	Frame Ground pin

2.4.15 PPDS-700-IP67

➢ The following is an overview and pin assignments of the serial port, power supply and LED indicators:

PPDS-741-IP67

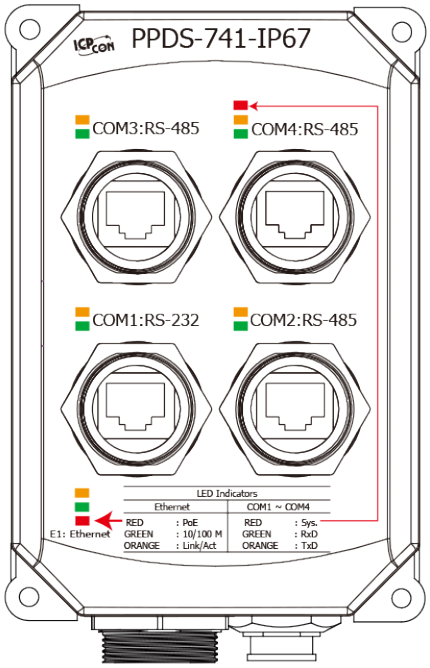

PPDS-742-IP67

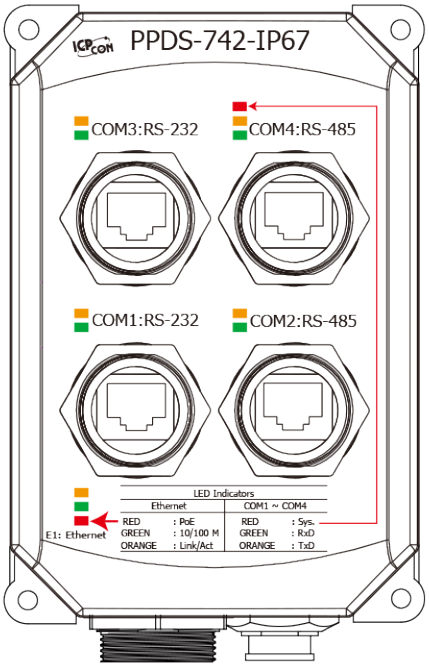

PPDS-743-IP67

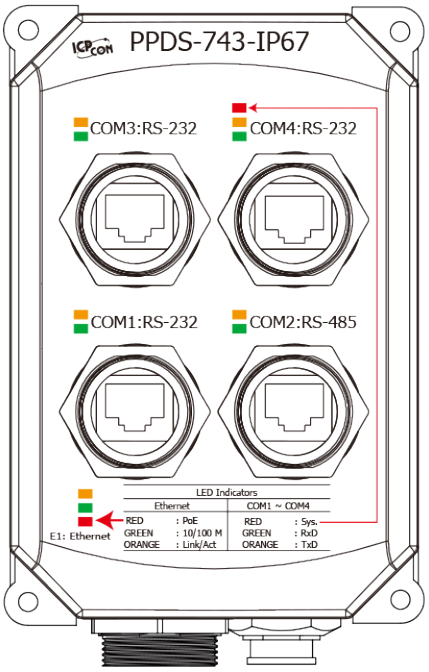

COM1 ~ COM4



Pin	5-wire RS-232	2-wire RS-485
1	--	--
2	RTS	--
3	GND	GND
4	TxD	--
5	RxD	DATA+
6	--	DATA-
7	CTS	--
8	--	--

DC +12 ~ +48 V_{DC}

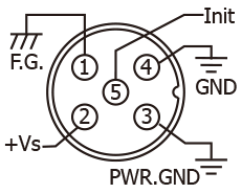

Pin	Name
1	F.G.
2	+Vs
3	PWR.GND
4	GND
5	Init

LED Indicators		
System	Red	Sys.
Ethernet	Red	PoE (E1)
	Green	10/100M (E1)
	Orange	Link/Act (E1)
COM1 ~ COM4	Green	RxD
	Orange	TxD

➢ The following is an overview and pin assignments of the CA-RJ0903 Cable (optional):



9-pin Male D-sub and RJ-45 Cable, length 30 cm
This cable do not meet IP67 waterproof, but can be used with PPDS-700-IP67 for configuration purposes. The pin assignments and mapping table for the PPDS-700-IP67 module and the CA-RJ0903 cable are as follows:

PPDS-700-IP67		CA-RJ0903	
RS-232 Serial Port	**RS-485 Serial Port**	**RJ-45 10-pin Connector**	**DB-9 Connector**
		 RJ-45 10-Pin	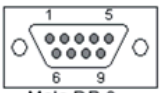 Male DB-9
--	--	Pin 1	Pin 1
--	--	Pin 2	Pin 6
RTS	--	**Pin 3**	**Pin 7**
GND	**GND**	**Pin 4**	**Pin 5**
TxD	--	**Pin 5**	**Pin 3**
RxD	**DATA+**	**Pin 6**	**Pin 2**
--	**DATA-**	**Pin 7**	**Pin 5**
CTS	--	**Pin 8**	**Pin 8**
		Pin 9	Pin 4
		Pin 10	Pin 9

2.5 Wiring Notes

2.5.1 RS-232 Wiring

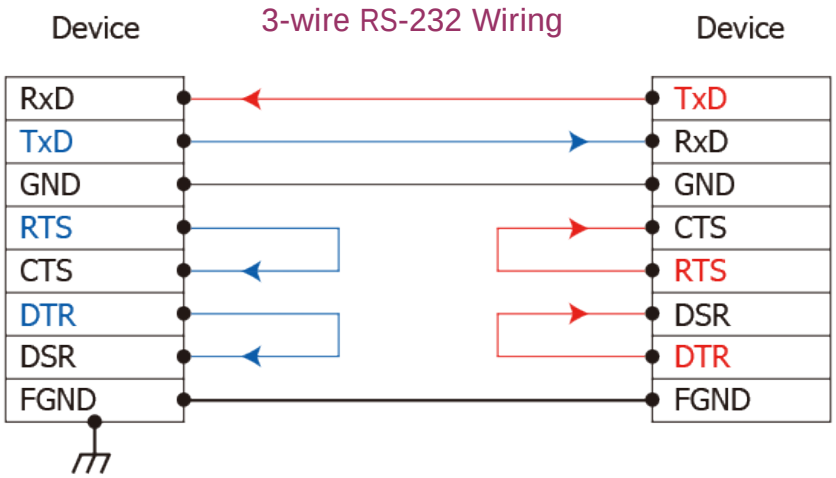

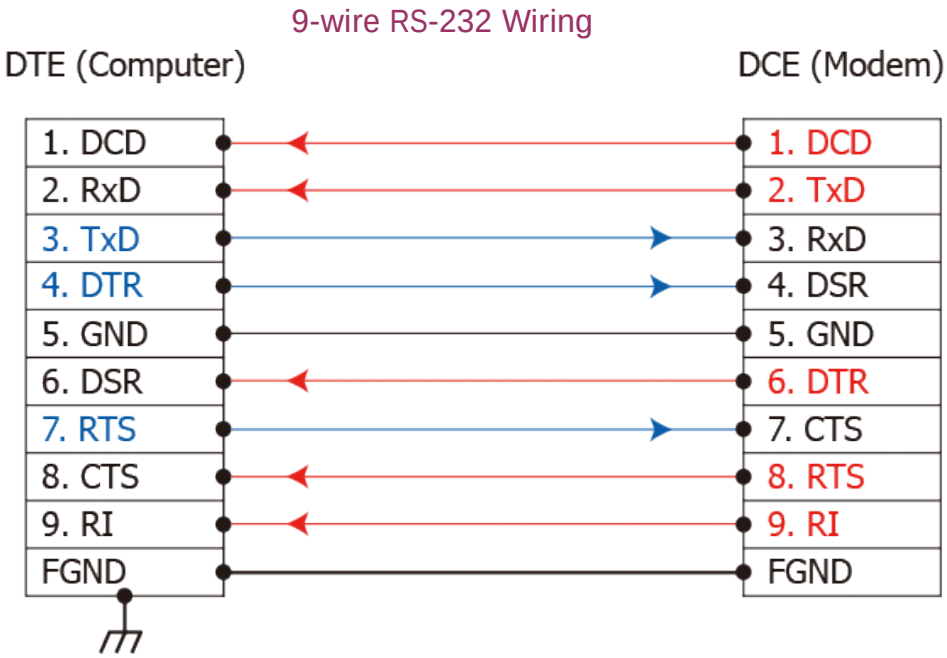

⚠ Notes:

1. **For 3-Wire RS-232 connections, it is recommended to short unused signals such as RTS/CTS and DTR/DSR, since some system may still check the CTS and DSR status.**
2. **FGND is the frame ground that soldered to DB9 metal-shield.**

2.5.2 RS-422 Wiring

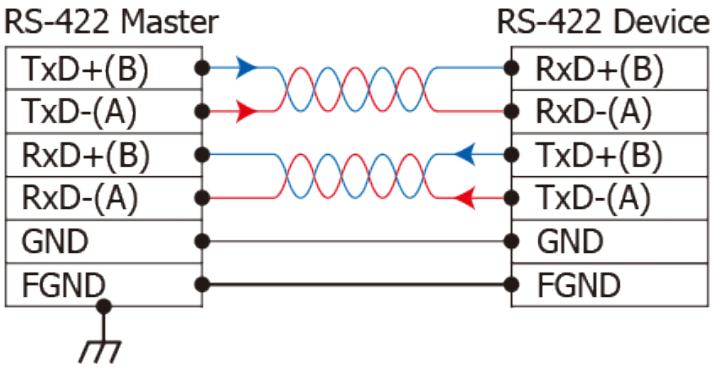

2.5.3 RS-485 Wiring

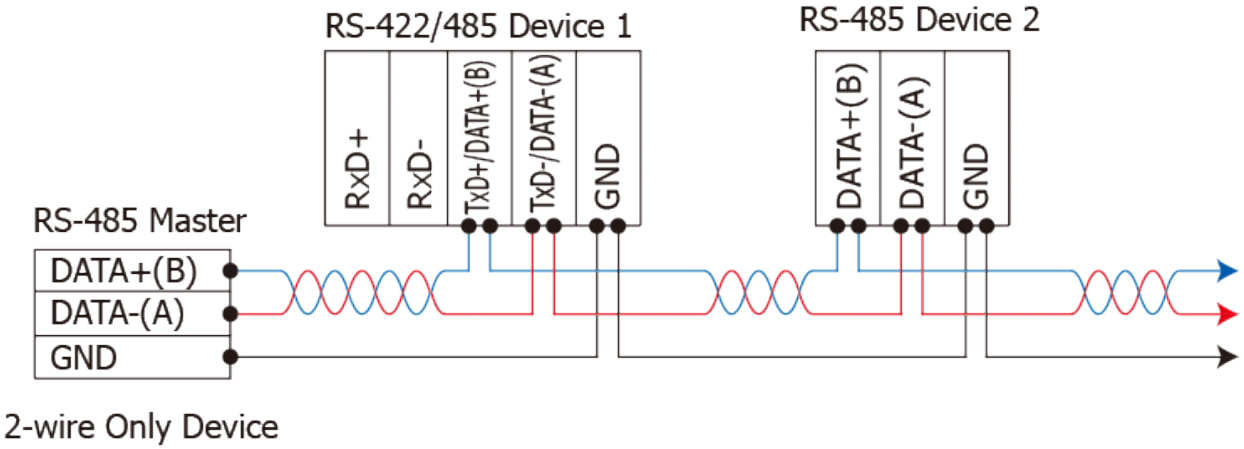

⚠ Notes:

1. **Usually, you have to connect all signal grounds of RS-422/485 devices together to reduce common-mode voltage between devices.**
2. **Twisted-pair cable must be used for the DATA+/- wires.**
3. **Both two ends of the cable may require a termination resistor connected across the two wires (DATA+ and DATA-). Typically 120 Ω resisters are used.**
4. **The Data+ and B pins are positive-voltage pins, and Data- and A pins are negative-voltage pins in the above figure. The B/A pins may be defined in another way depending on devices, please check it first.**

2.5.4 Digital Output Wiring

Output Type	DO Command as 1	DO Command as 0
Drive Relay	Relay ON	Relay Off
	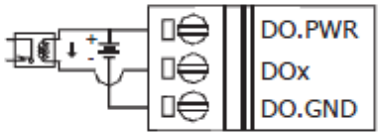	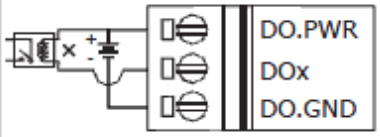
Resistance Load		
	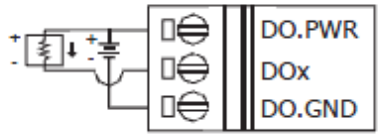	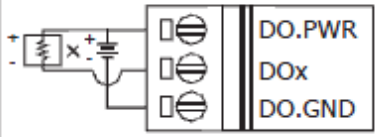

2.5.5 Digital Input Wiring

Input Type	DI Value as 0	DI Value as 1
Relay Contact	Relay ON	Relay Off
	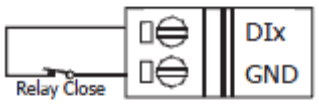	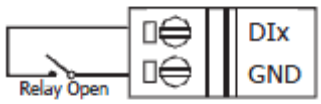
TTL/CMOS Logic	Voltage < 1V	Voltage > 3.5V
	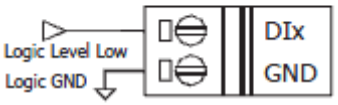	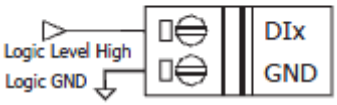
Open Collector	Open Collector On	Open Collector Off
	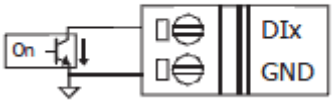	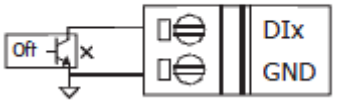

2.6 Dimensions

2.6.1 PDS-700(D)/PPDS-700(D)-MTCP Series

Unit: mm

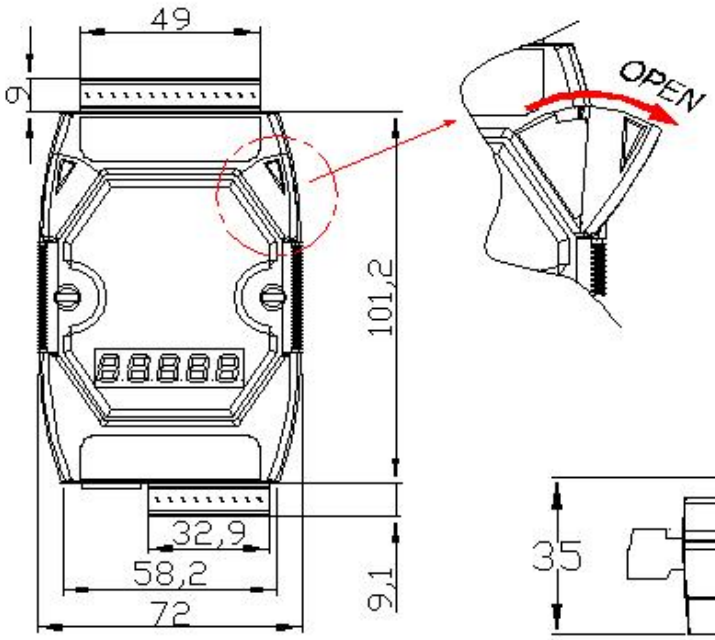

Front View

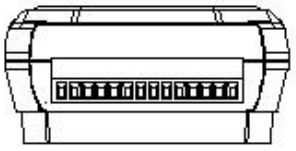

Top View

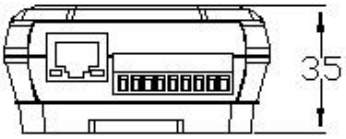

Bottom View

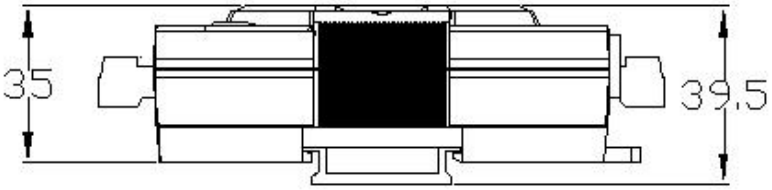

Din-Rail Mounting Bracket

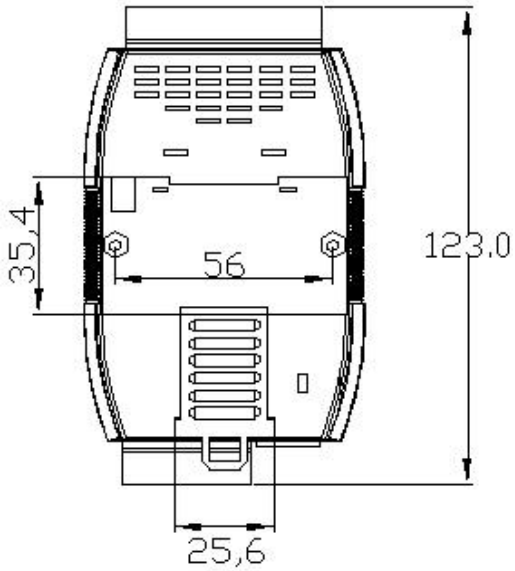

Back View

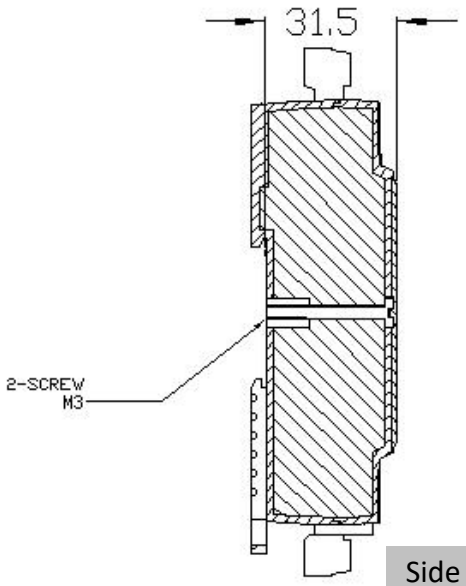

Side View

2.6.2 PDSM-700(D)/PPDSM-700(D)-MTCP Series

Unit: mm

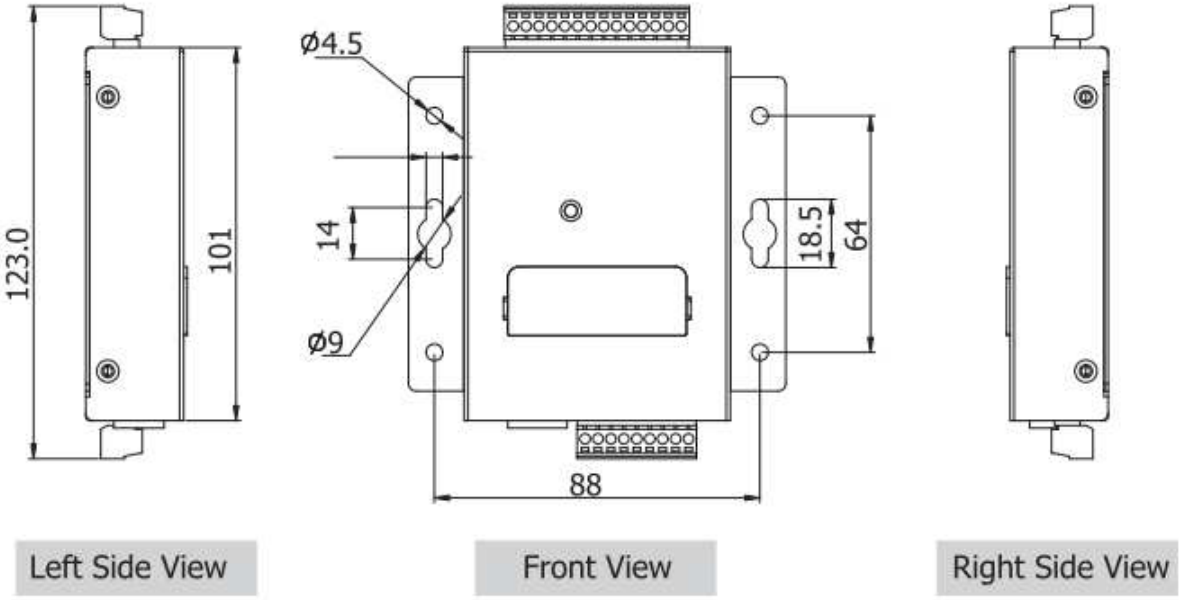

Left Side View | Front View | Right Side View

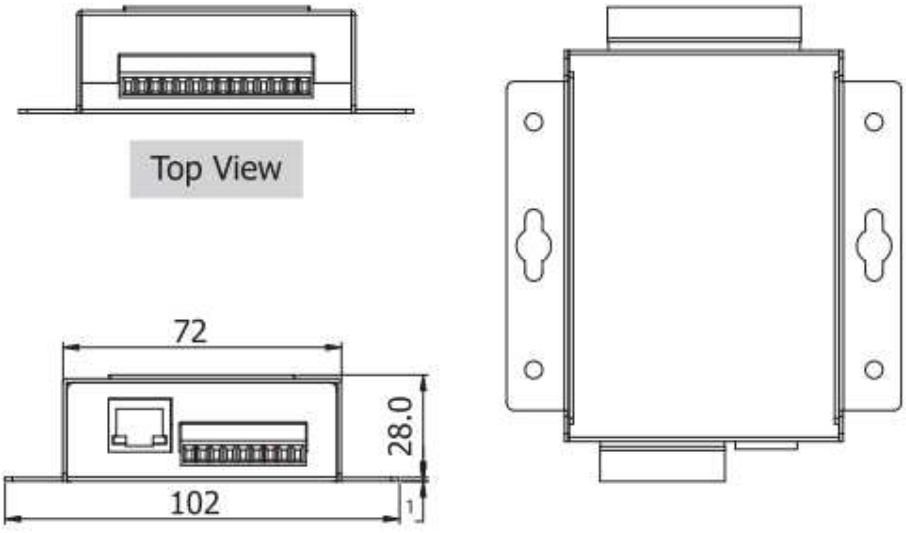

Top View | Back View | Bottom View

2.6.3 PPDS-700-IP67 Series

Unit: mm

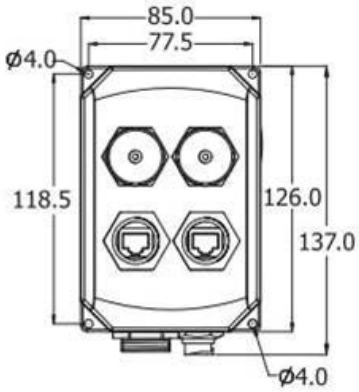

Front View



Back View

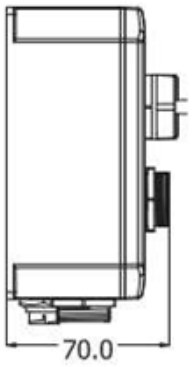

Left Side View

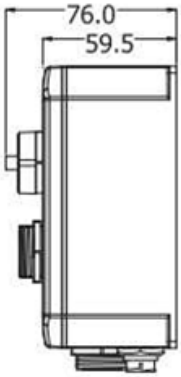

Right Side View

Top View



Bottom View

IP67 Ethernet Cap with Tether

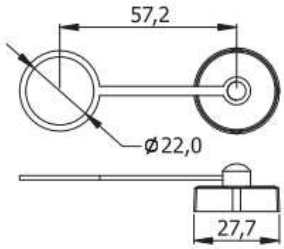

IP67 Ethernet Plug

Cable Dia:
Max. 7.0 mm
Min. 5.5 mm

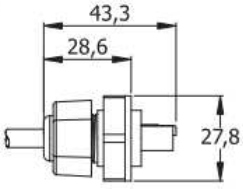

IP67 PWR Plug

Cable Dia:
Max. 6.5 mm
Min. 5.0 mm

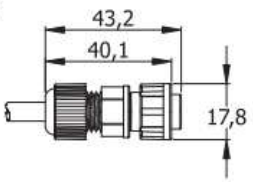

2.6.4 PDS-5105D-MTCP

Unit: mm

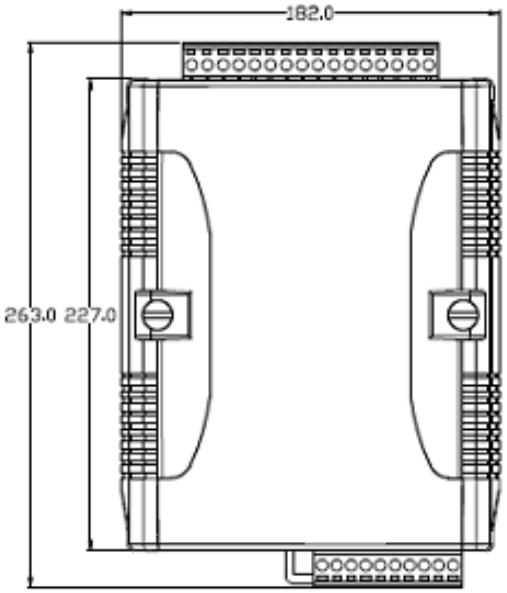

Front View

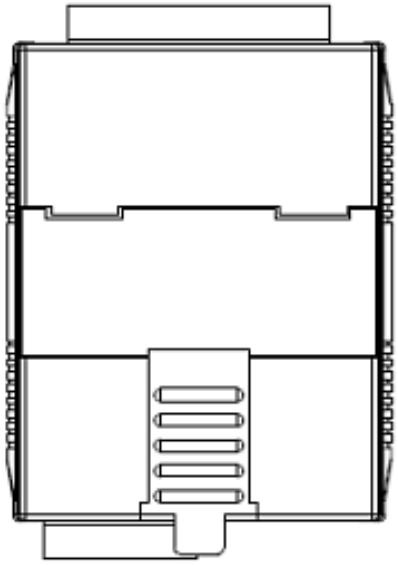

Back View

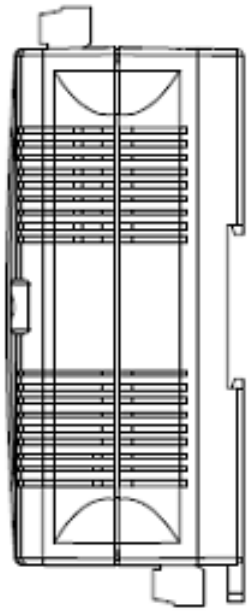

Left Side View

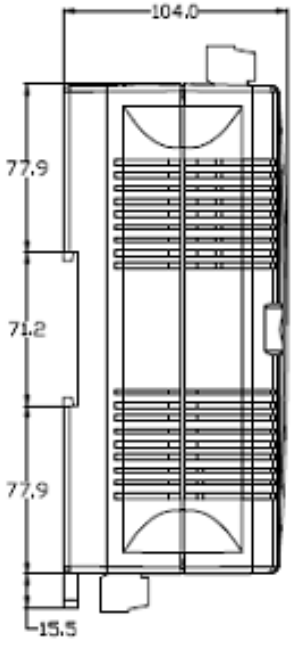

Right Side View

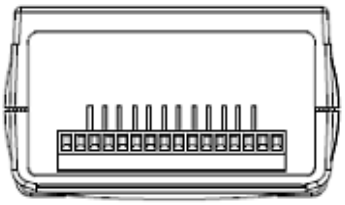

Top View

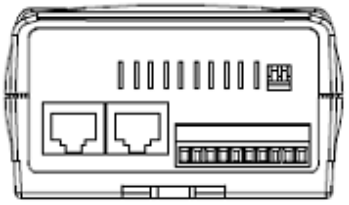

Bottom View

2.7 DIN-Rail Mounting

The PDS Series modules can be mounted by attaching the bottom of the chassis to a DIN-Rail, the wall or if can be piggybacked to another module.

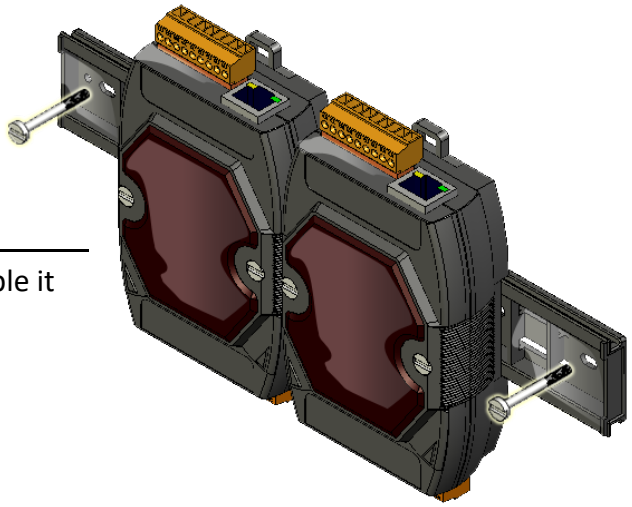

➢ DIN-Rail Mounting

The PDS series module contains simple rail clips to enable it to be reliably mounted on a standard 35 mm DIN rail.

Mounting on a DIN-Rail	Dismounting from a DIN-Rail
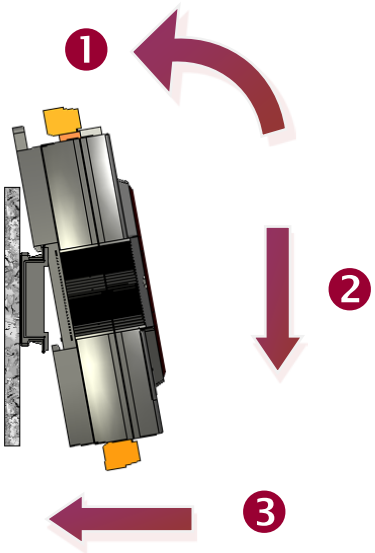	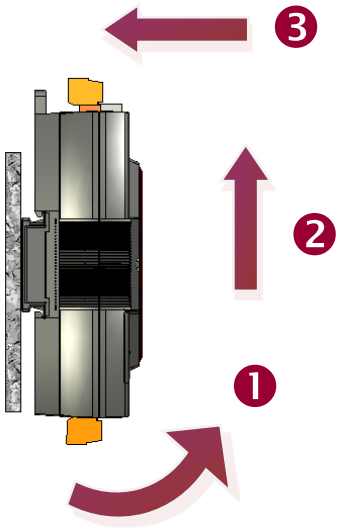

➢ DIN-Rail Mountable Model

There are three Din-Rail versions available that enable a variety of ICP DAS devices to be mounted. Each is made of stainless steel and has a ground wire attached at one end.

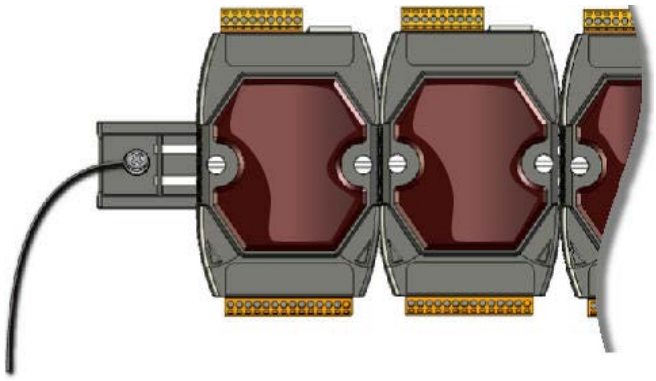

Part number	Maximum number of modules	Dimensions
DRS-125	2	125 mm x 35 mm
DRS-240	3	240 mm x 35 mm
DRS-360	5	360 mm x 35 mm

➢ Piggyback Mounting

PDS Series module contains holes on each side to enable piggyback mounting.

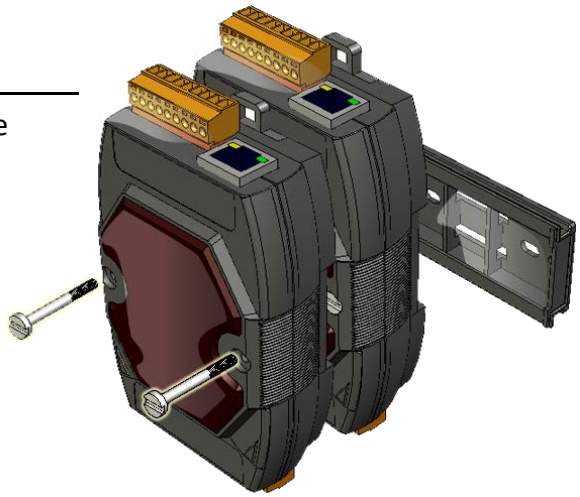

⚠Note that piggyback mounting can not apply to the (P)PDSM-700(D)(-MTCP) and PPDS-700-IP67 Series modules.

2.8 PDS Series Diagnostics (LED Indicator)

This section provides detailed information about the LED functions and behavior are given below.

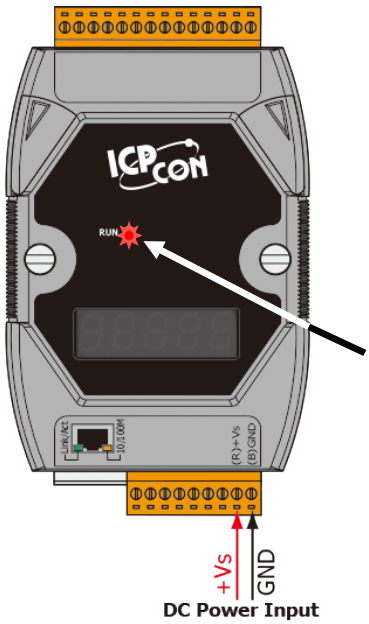

Step 1: Apply power (+Vs, GND) to the PDS Series module.

※ **PDS(M)-700 series** power supply can range from **+10 to +30 V_{DC}.**

※ **PPDS(M)-700-MTCP, DS-700, PPDS-700-IP67, PDS-782-25 and PDS-5105D-MTCP series** power supply can range from **+12 to +48 V_{DC}.**

Step 2: Once power is supplied to the PDS series module, the system LED indicator will illuminate, as follows:

- → ON
- → OFF
- Unit → 0.5 second

OS	→										
M0	→										
M1	→										
M2	→										

The PDS contains either Xserver or VxComm as default when shipped that is in the OS mode.

If the LED is always ON, take the following steps:

1. Power off the module
2. Connect the INIT* pin to the Vs+ pin
3. Power on the module and double check the configuration

Step 3: Check the 5-digit 7-SEG LED. Data will be shown as follows:

⚠ **Note: Only D-version modules have a 5-digit 7-SEG LED.**

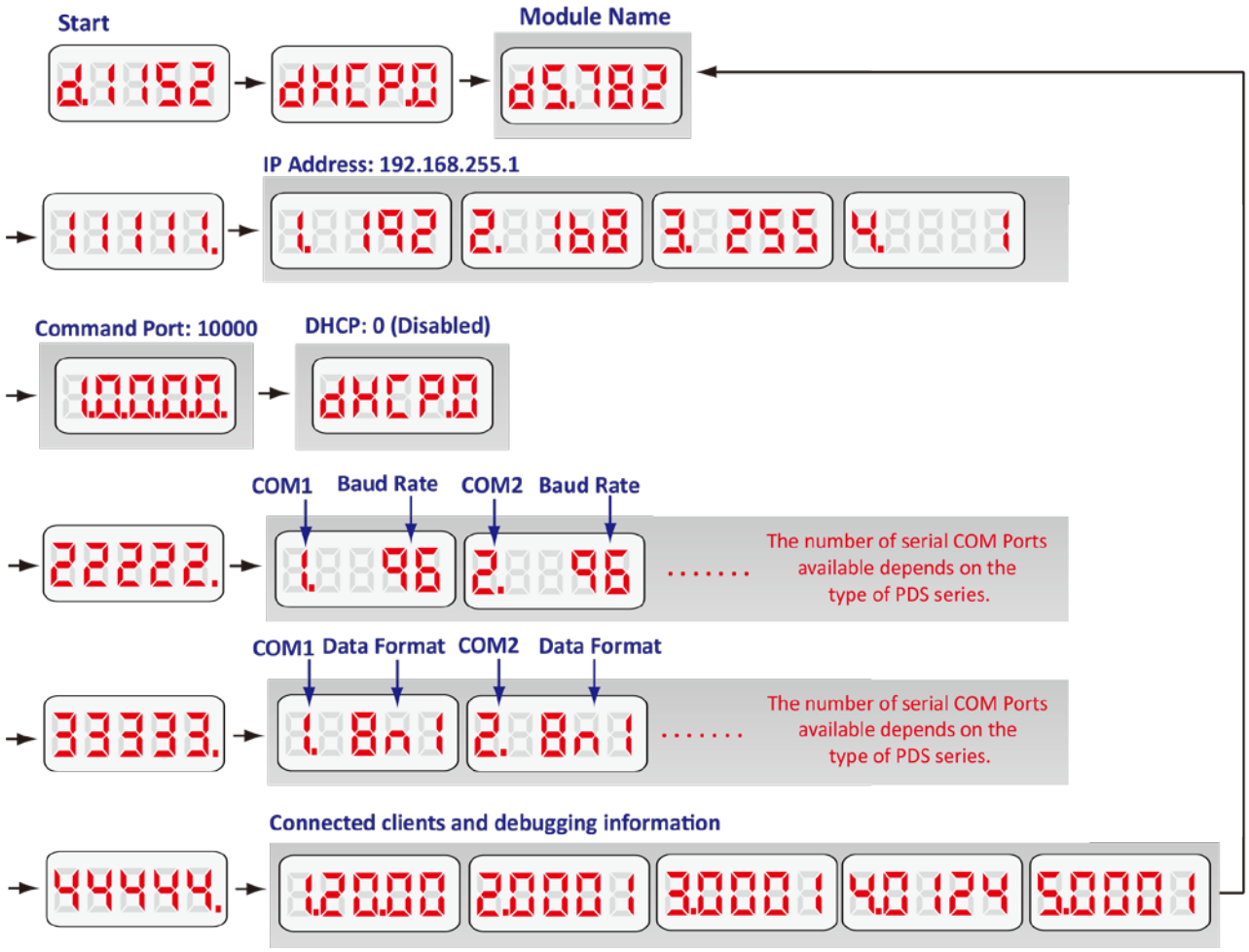

Information related to the PDS series module can be classified into 4 main areas:

- **Group ID 11111:** The IP address information for the PDS series
- **Group ID 22222:** The Baud Rate for all COM Ports
- **Group ID 33333:** The COM Port configuration
- **Group ID 44444:** The Connected clients and debugging information for this PDS series module

The format for the PDS IP address information is as follows:

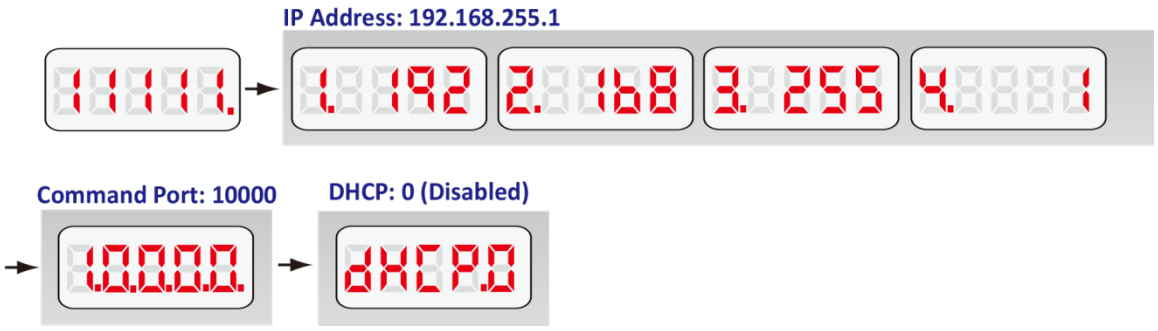

- **5-Digit LED Group ID:** 11111
- **LED -1:** indicator, which can be either 1, 2, 3 or 4
- **LED -2~5:** IP address
- **TCP command port** (Default = 10000)
- **DHCP Setting:** disabled (0)/enabled (1)

The LED will initially display the Group ID, and will then display the IP address as illustrated in the previous diagram. If the IP address is changed, the value displayed will change immediately. The default shipping IP is 192.168.255.1 and the display sequence is shown in the previous diagram.

The format for the COM Port Baud Rate information is follows:

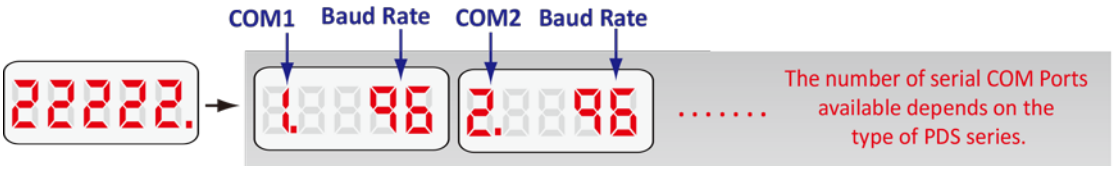

- **5-Digit LED Group ID :** 22222
- **LED-1:** COM Port number
- **LED-2~5:** The Baud Rate determined as (Baud Rate/100)

LED-1 displays the COM Port number, with LED-2~5 showing the Baud Rate for that COM Port. The Baud Rate = (value shown by LED-2~5) * 100. Therefore, a COM Port value displayed as 1.96 means that the Baud Rate of COM1 = 9600 bps; a value displayed as 2.1152 means that the Baud Rate of COM2 = 115200 bps. The Baud Rates for all PDS COM Ports will be shown in sequence.

The format for the COM Port Data Format configuration information is as follows:

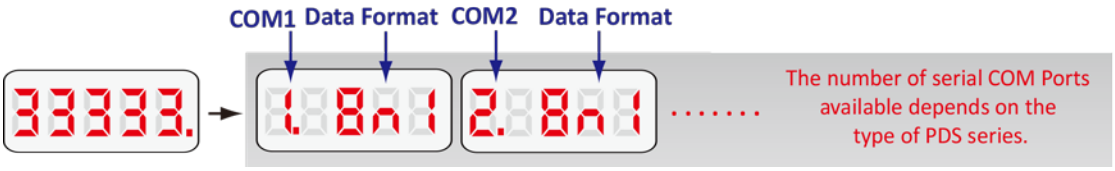

- **5-digit LED Group ID:** 33333
- **LED-1:** COM Port number
- **LED-3:** Data Bit: 5 , 6 , 7 or 8
- **LED-4:** Parity Bit: n = no parity, E = even parity, O = odd parity, M = mark parity or S = space parity
- **LED-5:** Stop Bit: 1 or 2

The format for the connected clients and debugging information is as follows:



- **5-digit LED Group ID:** 44444
- **LED-1 will display 1, 2, 3, 4 and 5** in sequence.
- When **LED-1 is 1**, LED-2/3 indicates the number of available free sockets (default is 26 for PDS), and LED-4/5 shows the number of sockets being used by clients (default is 0), e.g. 12600
- When **LED-1 is 2**, LED-2~5 indicates how many times the PDS-700 has been reset, e.g. 20002 (The PDS has been reset 2 times)
- When **LED-1 is 3**, the display indicates how many Ethernet packets are currently being received by the PDS.
- When **LED-1 is 4**, the display indicates that the status of the internal Flag used to allow Ethernet packets to be sent is 0 or 1.
- When **LED-1 is 5**, the display indicates the number of times the Ethernet chip has been reset.

When the PDS is first powered-up or if it has just been reset, the reset state = 1. If any client connects to the PDS, the reset state will be changed to 0. In addition, the number of free sockets will be decreased and the number of used sockets will be increased. If the number of free sockets is reduced to 0, then no additional clients will be able to link to the PDS. The default number of free-sockets for the PDS is 26. Therefore, the server (VxComm firmware or Xserver firmware) allows 26 connections to be linked to a single PDS. Each client program occupies at least 2 connections for a single serial port, one connection for data and another for commands.

- **Module Name:** dS.7xx

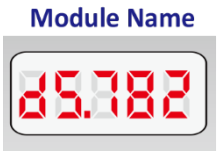

If the 5-digit LEDs do not display the above detail, take the following steps:

1. Power off the module
2. Connect the INIT* pin to the Vs+ pin
3. Power on the module and double check the configuration

Step 5: Power off the module.

2.9 Init/Normal Operating Mode

- **Init Mode:** Configuration mode
- **Normal Mode:** Firmware operation mode (Factory Default)

For PDS series modules, the operating mode switch is set to the **Normal** position by default. In order to update the firmware for the PDS series modules, the switch must be moved from the **Normal** position to the **Init** position. The switch must be returned to the Run position after the update is complete.

2.9.1 PDS-700(D)/PPDS-700(D)-MTCP Series



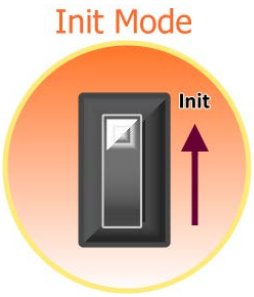

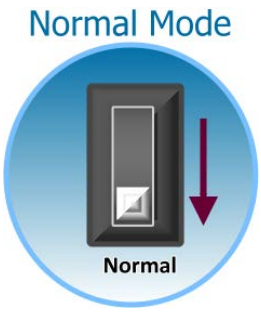

2.9.2 DS-700/PDS-782(D)-25 Series

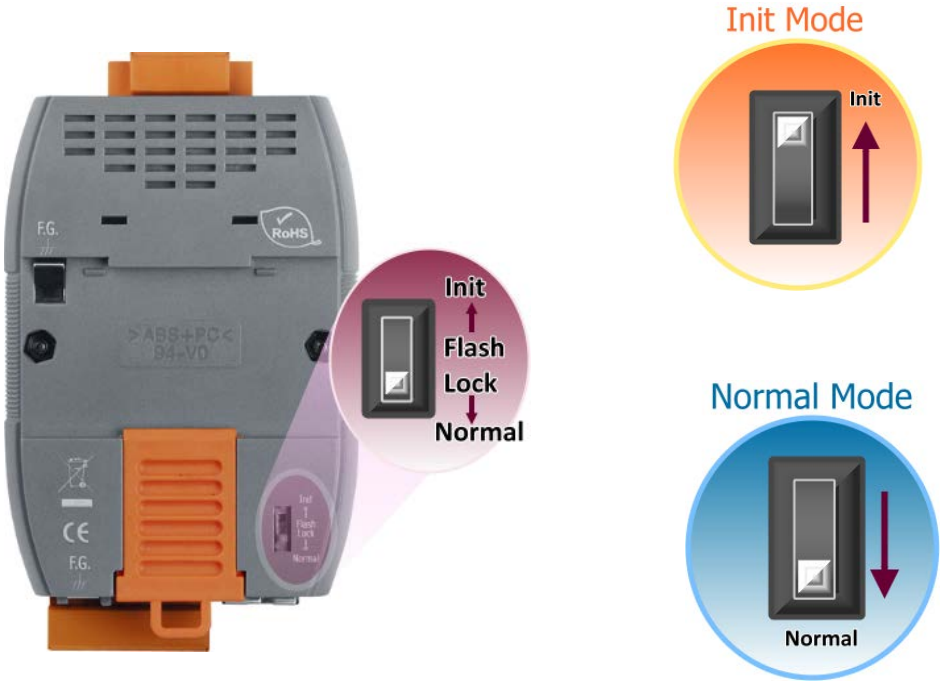

2.9.3 PDSM-700(D)/PPDSM-700(D)-MTCP Series

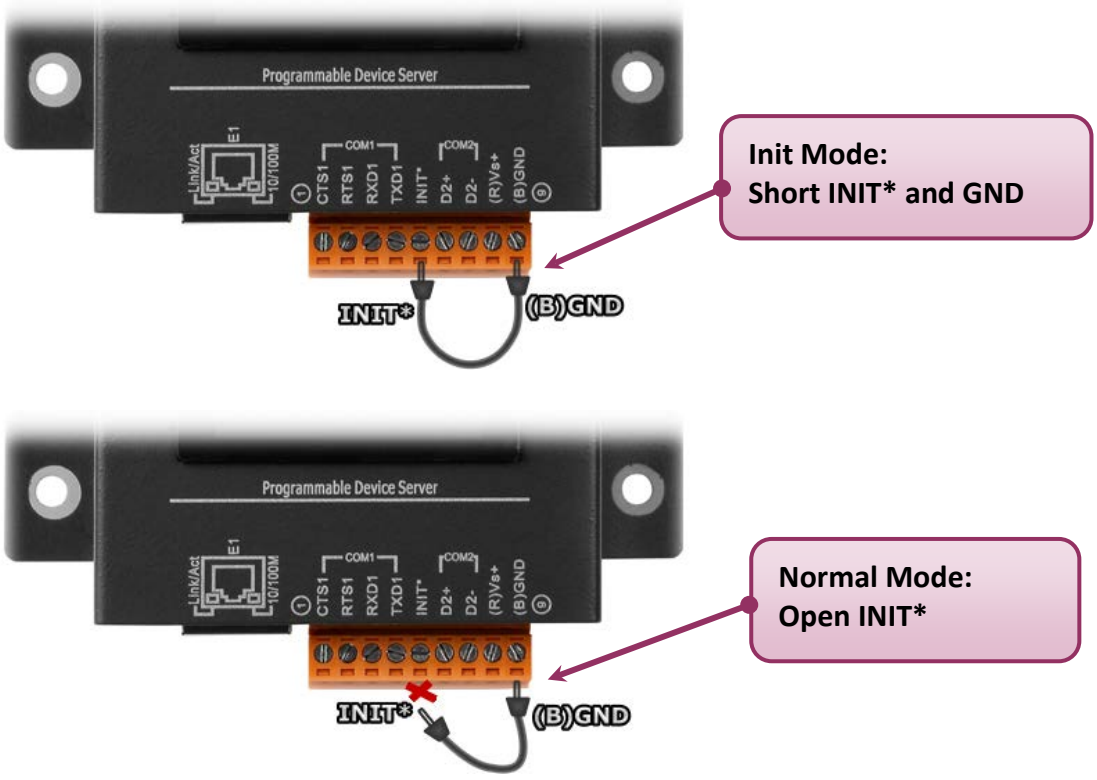

2.9.4 PPDS-700-IP67 Series

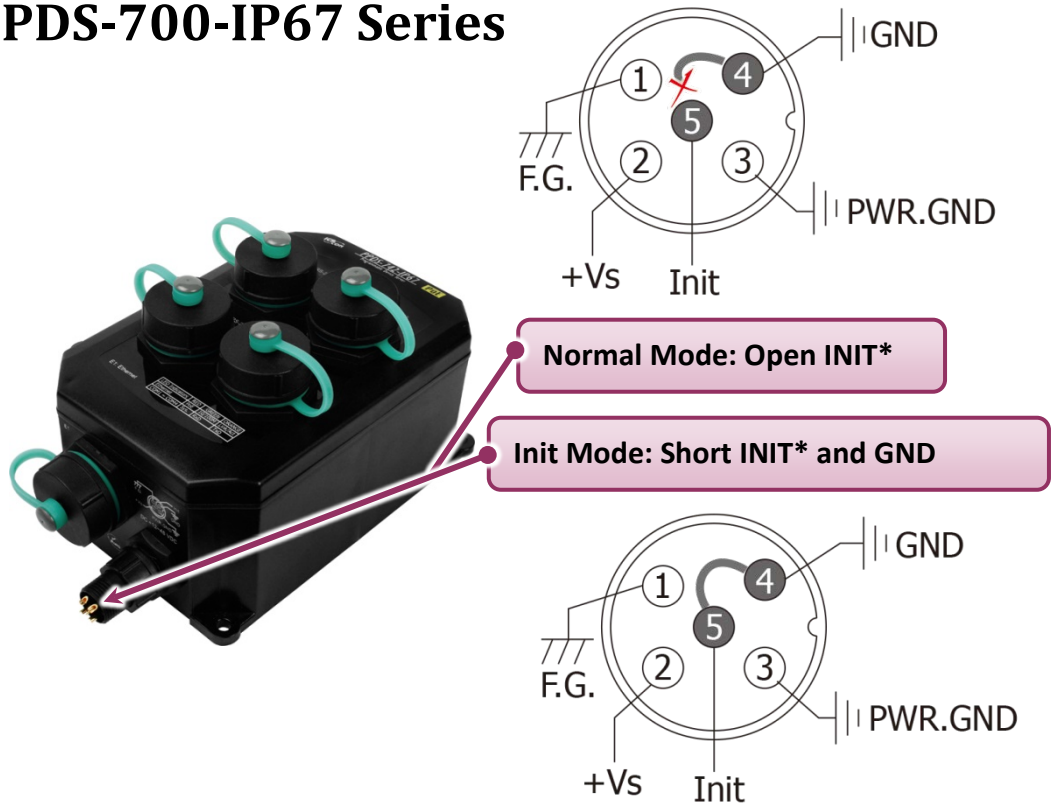

2.9.5 PDS-5105D-MTCP

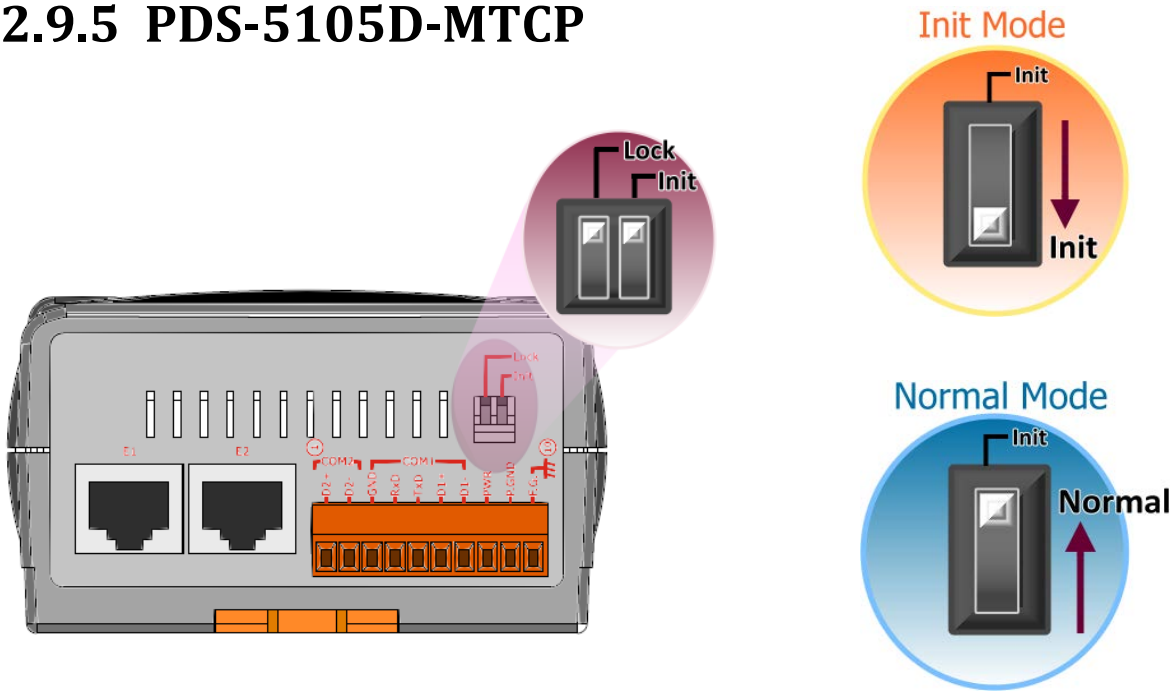

2.10 Flash Protection Function

In factory default settings, the **"flash protection"** function is disabled. User can modify the program by yourself or update the firmware. But if need to avoid writing or erasing any file in the flash, user have to enable the **"flash protection"** function in the PDS modules. Please switch the position of the jumper to **"LOCK"** and then the PDS modules can restrict any write to flash memory. For more detailed steps as follows:

2.10.1 PDS-5105D-MTCP Module

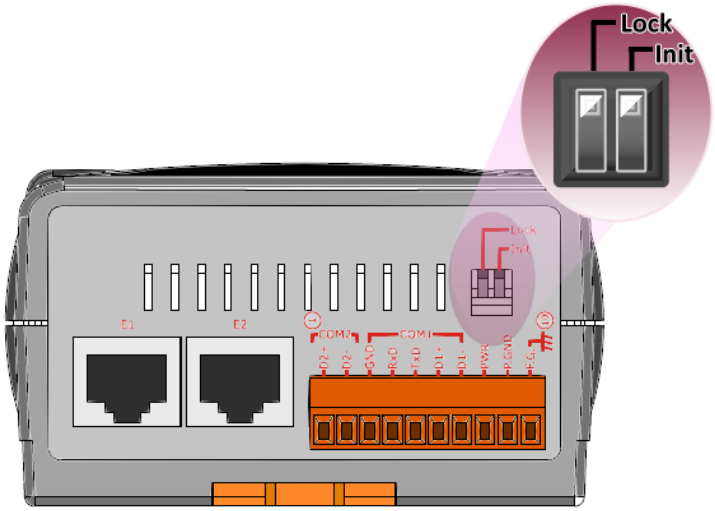

➢ **Factory Default is Non-Lock position**

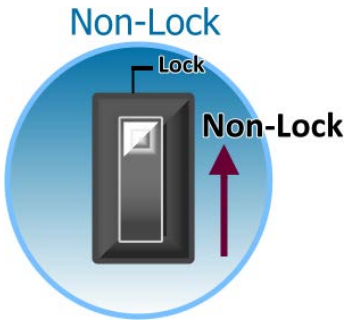

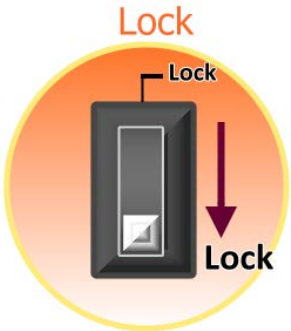

➢ **Flash Lock**

2.10.2 PDS(M)-700(D)/PPDS(M)-700(D)-MTCP Series

➢ **Step 1: Remove the screw**

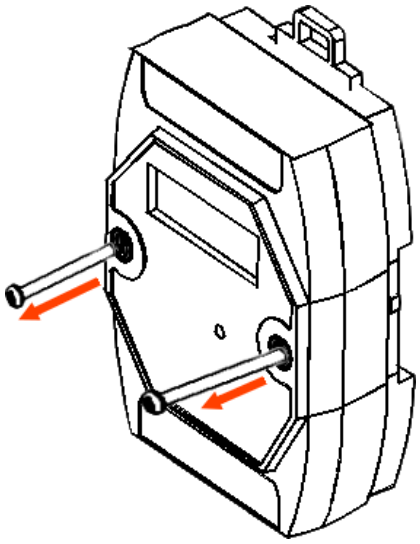

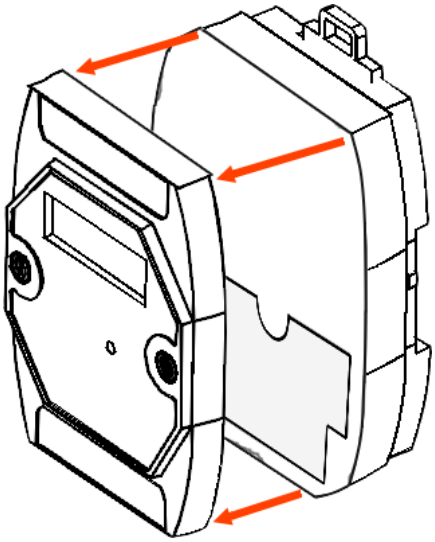

➢ **Step 2: Remove the top shell**

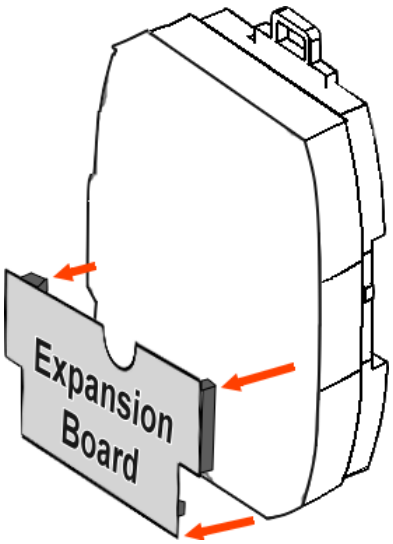

➢ **Step 3: Carefully pick up**

➢ **Step 4: Factory Default is Non-Lock position**

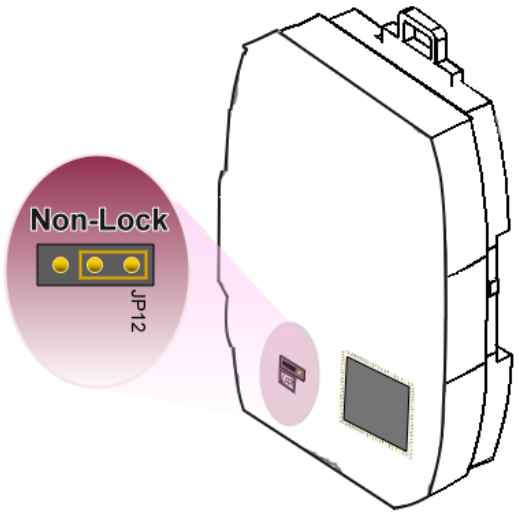

➢ **Step 5: Flash Lock**

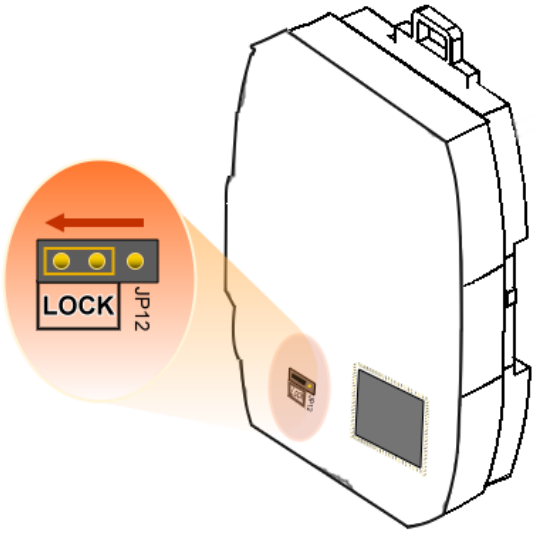

2.10.3 DS-700/PDS-782(D)-25 Series

➢ **Factory Default is Normal position (Flash Non-Lock)**





➢ **Flash Lock**

2.11 Waterproofing Attachment Installation for PPDS-700-IP67 Series



2.11.1 Power Plug Installation



Waterproofing Power Plug (4SI01K0000013)

➢ **Step 1: Prepare a Power Cable**

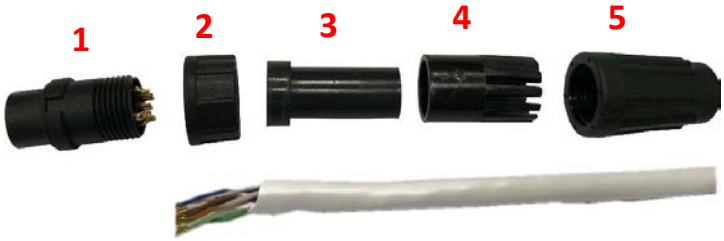

➢ **Step 2: Check the item 1 of IP67 power plug**

Wrong



Correct



➢ Step 3: Insert into the power cable



➢ Step 4: Weld power plug and wires

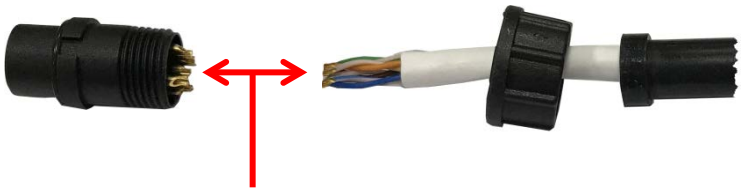

Welding (see Section 2.4.15 for pin-assignment of PPDS-700-IP67)

➢ Step 5: Assemble item 1 and 2

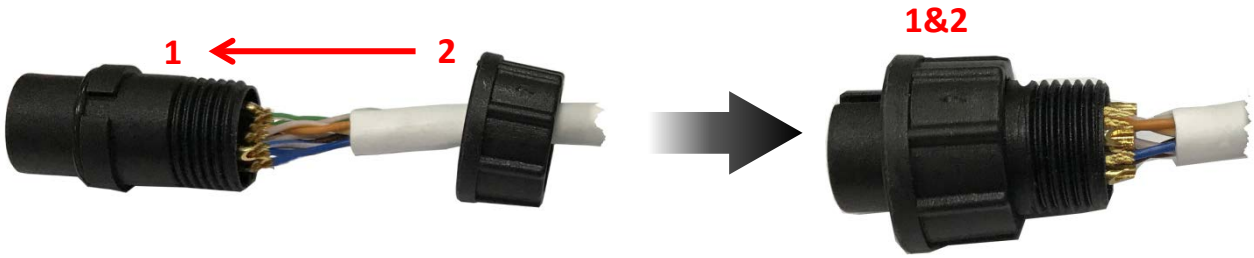

➢ Step 6: Assemble item 3 and 4

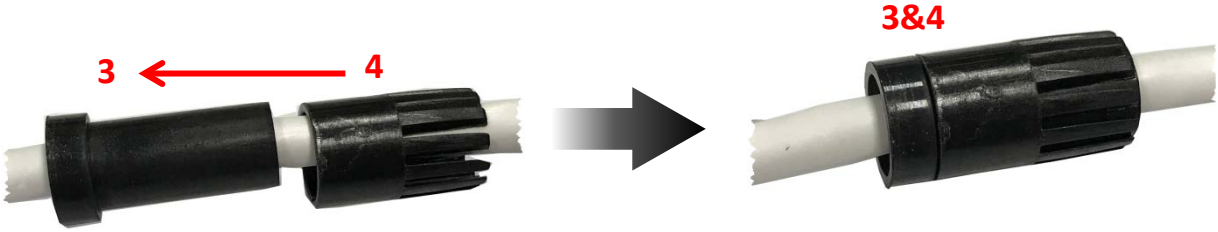

➢ Step 7: Assemble item 1&2 and 3&4

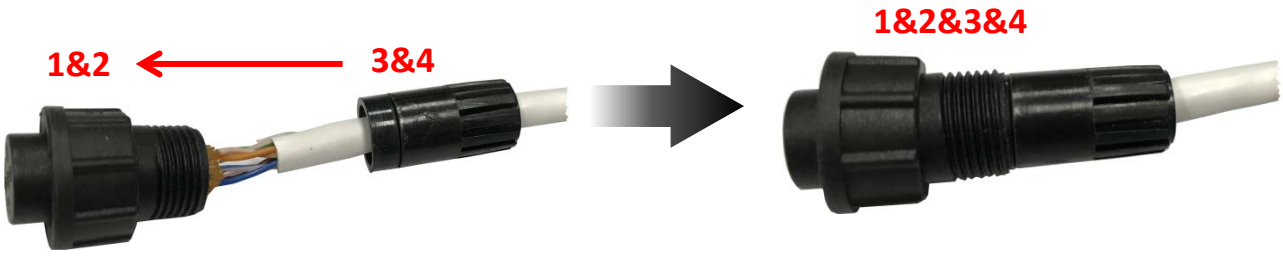

➢ Step 8: Assemble item 1&2&3&4 and 5

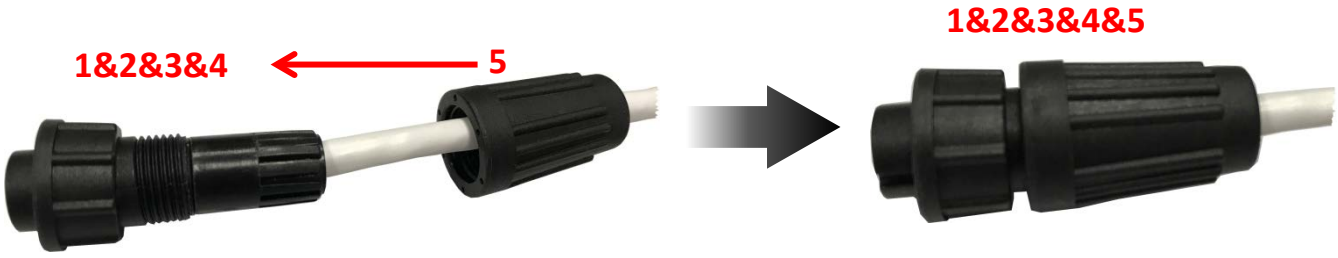

➢ Step 9: Make sure to tighten firmly



➢ Step 10: Connect the Power cable to PPDS-700-IP67 on Power plug

The fool-proofing groove (as red circle) is useful for easy connection of power cable and power plug. Please make sure they are located in the same direction when connecting these two items.

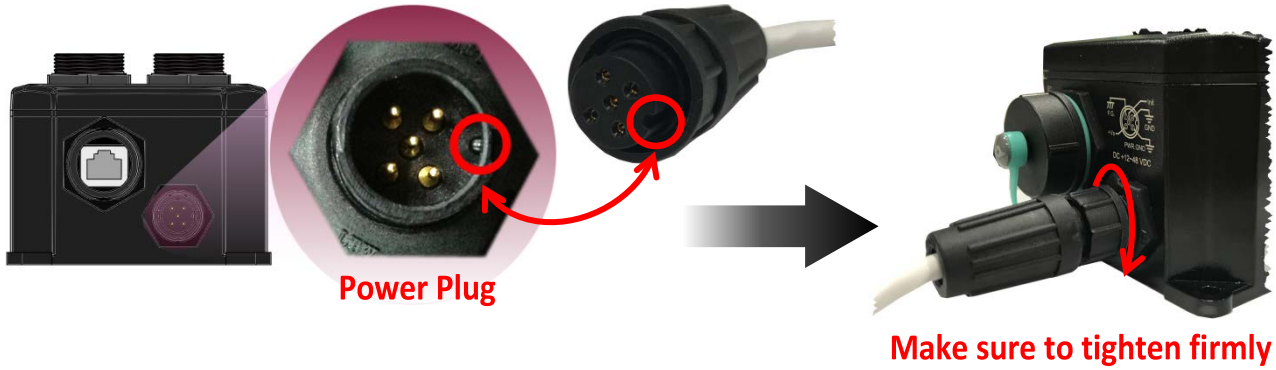

-Complete-

2.11.2 RJ-45 Plug Installation





Waterproofing RJ45 Plug (4SASO-0001)

➢ **Step 1: Prepare a RJ45 Cable**





➢ **Step 2: Insert into the RJ45 cable**



➢ **Step 3: Assemble item RJ45 connector and RJ45 cable**

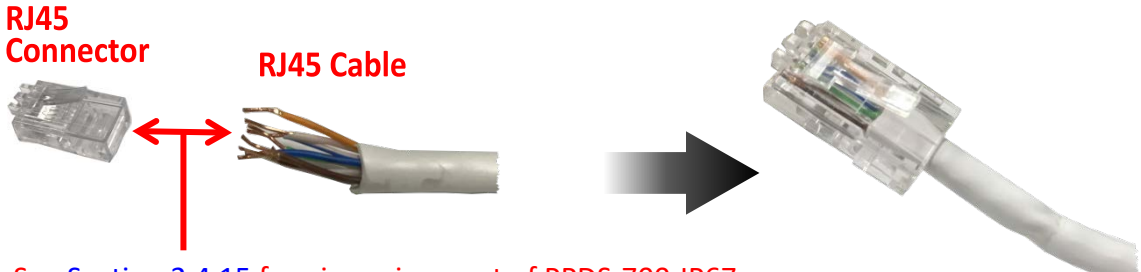

See Section 2.4.15 for pin-assignment of PPDS-700-IP67

➢ Step 4: Assemble item 2 and 3

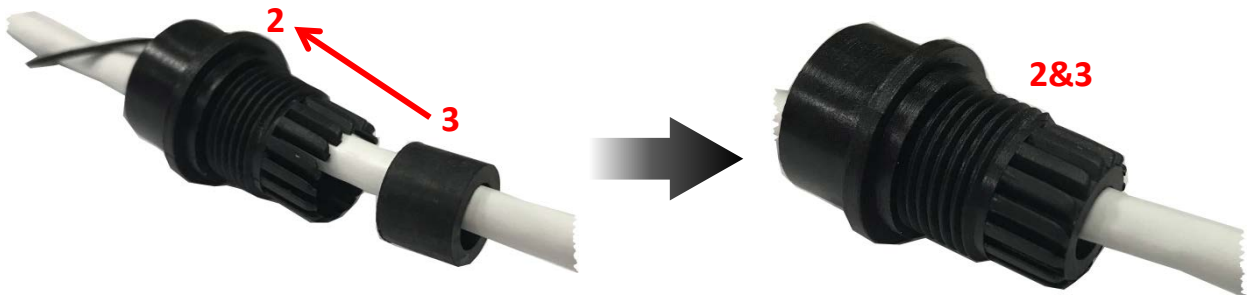

➢ Step 5: Assemble item 1 and 2&3

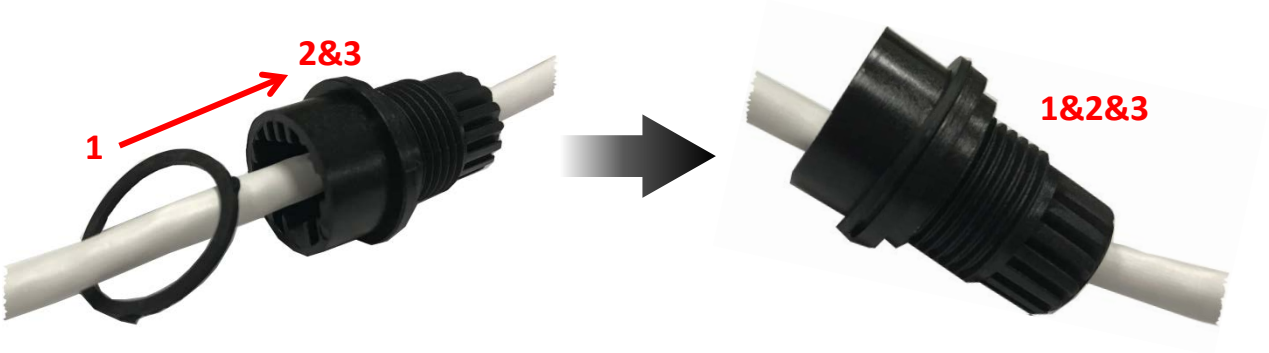

➢ Step 6: Assemble item 1&2&3 and 4

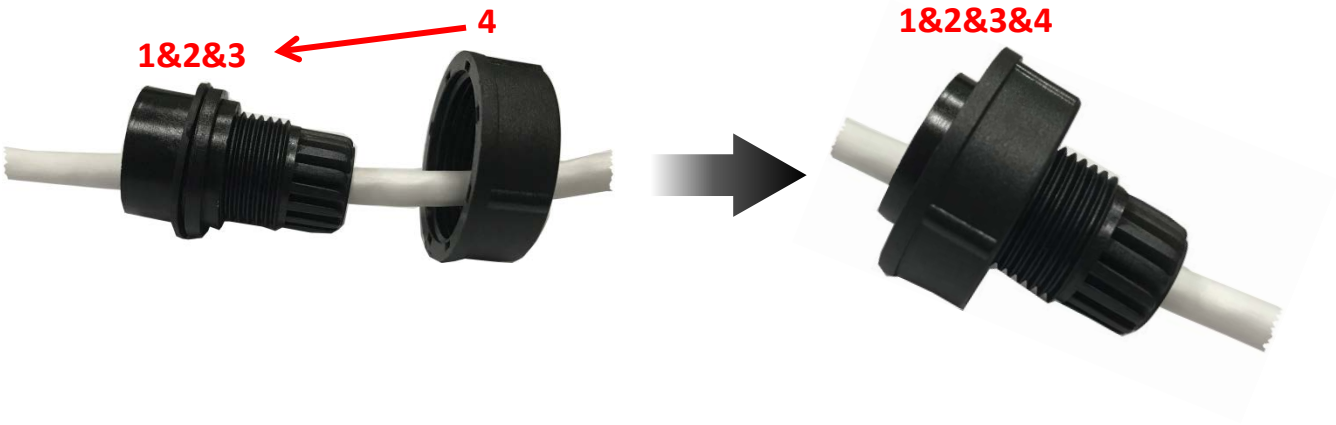

➢ Step 7: Assemble item 1&2&3&4 and RJ45 Plug

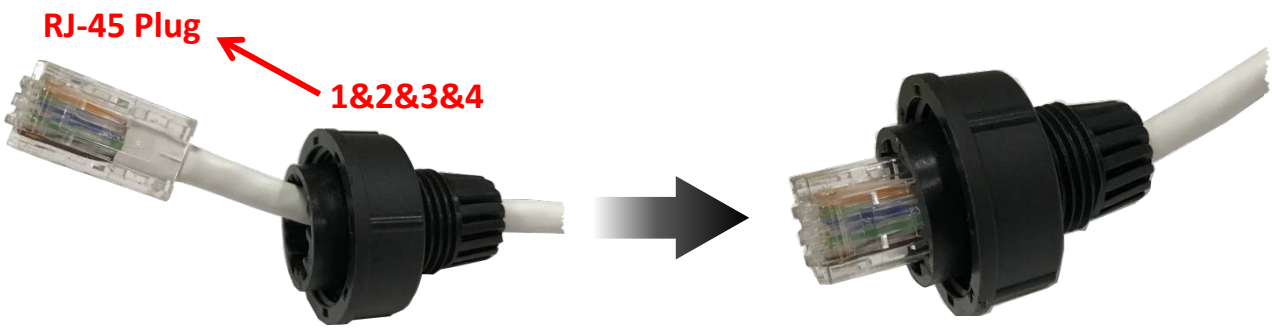

➢ Step 8: Remove the protective cover of COM Port on IP67 module



➢ Step 9: Connect the RJ45 Plug to COM Port on IP67

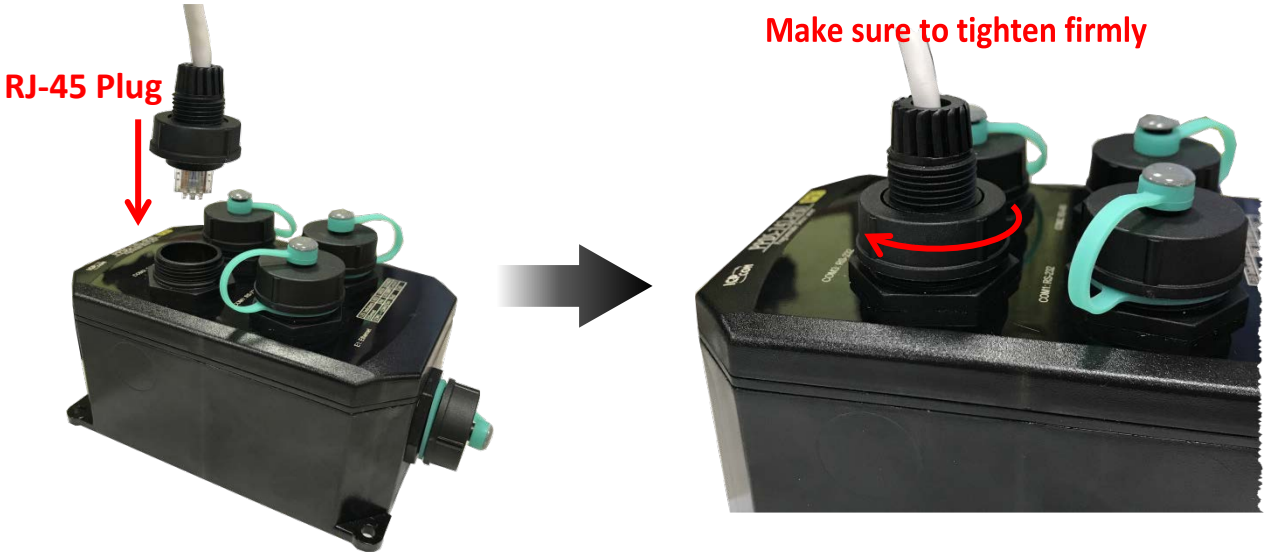

➢ Step 10: Assemble item 5 and RJ45 Plug



➢ Step 11: Make sure to tighten firmly



-Complete-

3. Setting up the PDS Series Module

This chapter provides detailed information about the **"Self-Test"** process, which is used to confirm that the PDS is operating correctly. Before beginning the **"Self-Test**" process, the wiring test, Ethernet configuration and VxComm utility driver installation procedures must first be fully completed. Follow the procedure described below:

3.1 Connect the Power Supply and the Host PC

1. Ensure that the network settings on your PC are configured correctly.

2. Ensure that the Windows firewall or any Anti-Virus firewall software is correctly configured or temporarily disable these functions; otherwise the "**Search Servers**" function in the VxComm Utility may not work as required. You may need to contact your System Administrator for more details of how to do this.

3. Connect both the PDS Series and the Host computer to the same sub-network or the same Ethernet Switch.

4. **Short the RxD and TxD pins** of the PDS Series for self-test.

5. **Supply power** (DC input or PoE) to the PDS series, refer to Section "DC Power Input (Non-PoE)" and Section "PoE Power Supply" for detail information.

Refer to Figures 3-1 to 3-5 **for an illustration of how to perform the above steps.**

DC Power Input (Non-PoE)

The definition for **"(R)Vs+"** and **"(B)GND"** for use as the DC power supply to all types of PDS series, refer to the table below for the valid voltage range for PDS series.

Model	PDS-700 Series PDSM-700 Series	DS-700 Series PDS-782-25 PDS-5105D-MTCP PPDS-700-MTCP Series PPDSM-700-MTCP Series PPDS-700-IP67 Series
Valid Power Voltage (Vs+) Range	+10 to +30 V_{DC}	+12 to +48 V_{DC}

➢ **Figure 3-1: DS-700/PDS(M)-700(D)/PPDS(M)-700(D)-MTCP series.**

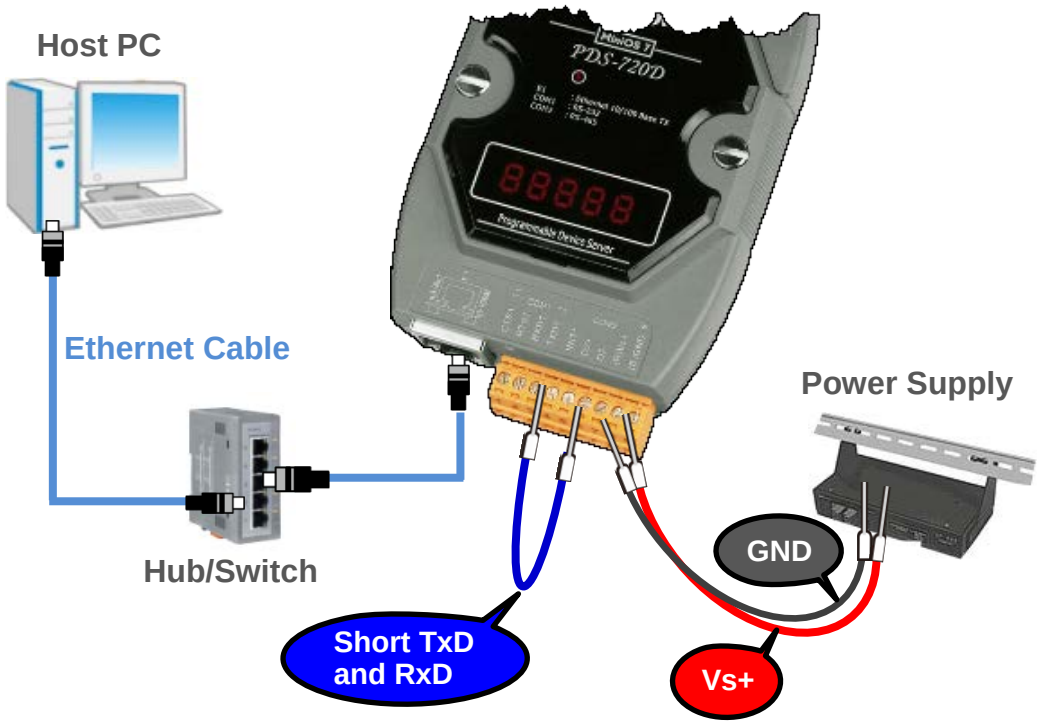

➢ **Figure 3-2: PDS-5105D-MTCP:**

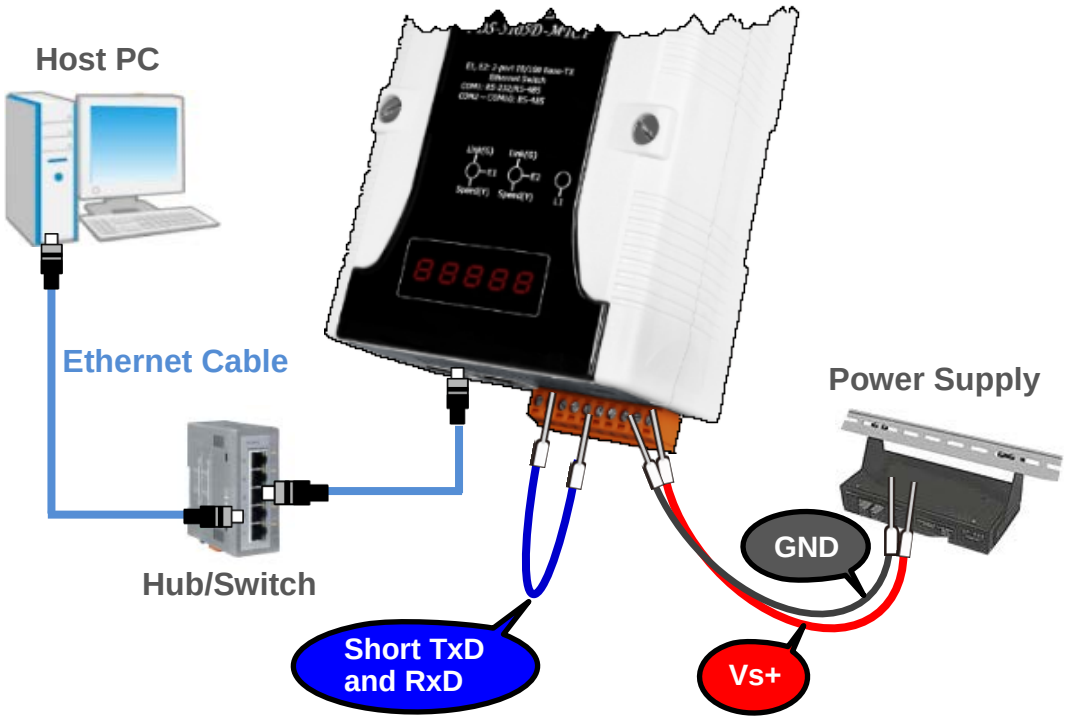

➢ **Figure 3-3: PPDS-700-IP67 series:**

Note:
Please refer to the pin definitions of PPDS-700-IP67 (see Section 2.4.15) to make RJ-45 wiring and power cables.

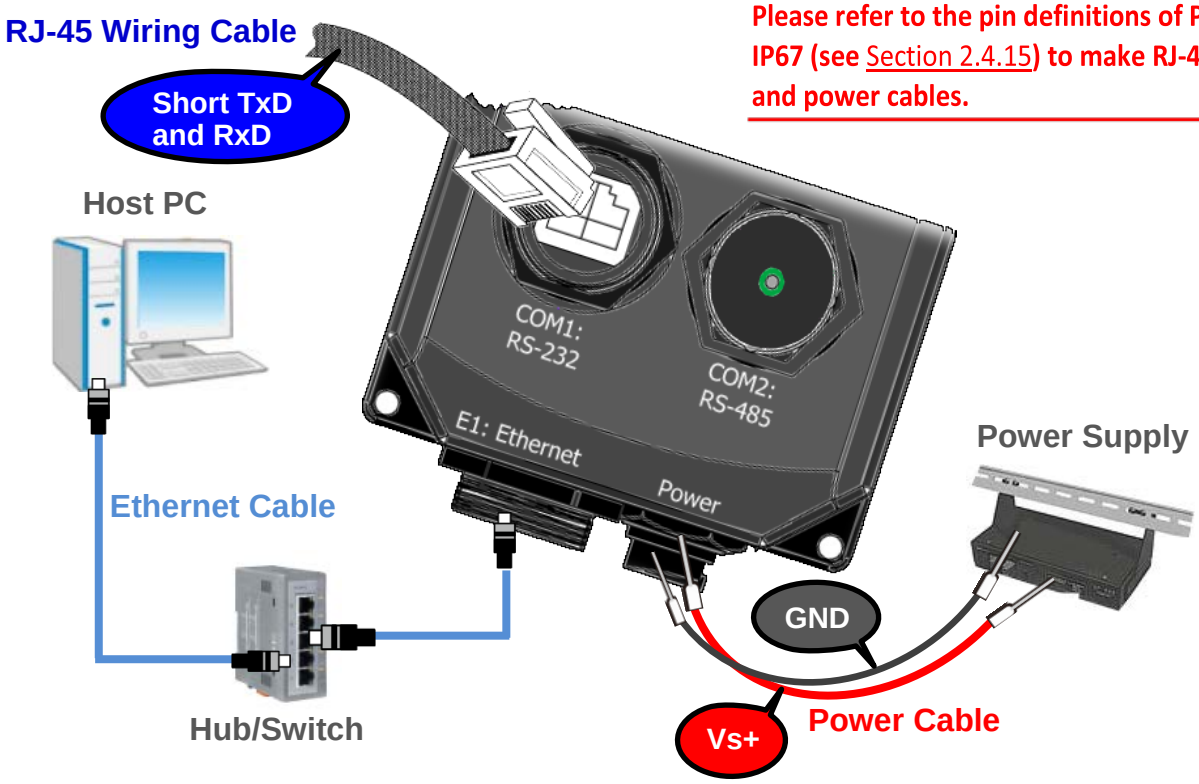

PoE Power Supply

The Ethernet port supports PoE (Power-over-Ethernet) functions for PPDS-700-MTCP, PPDSM-700-MTCP and PPDS-700-IP67 series modules only.

➢ **Figure 3-4: PPDS-700-MTCP and PPDSM-700-MTCP series:**

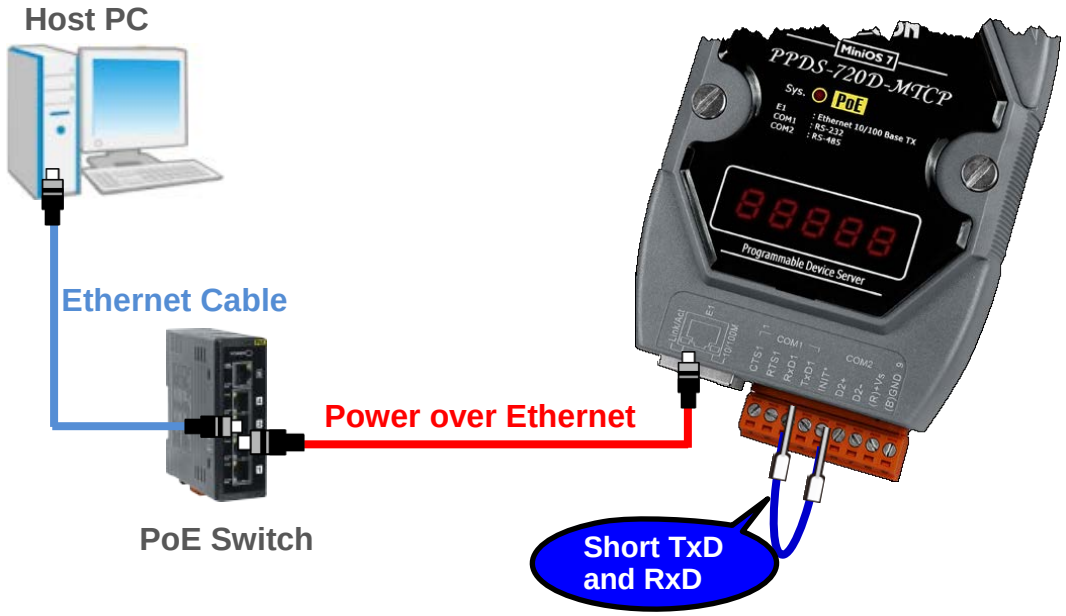

➢ **Figure 3-5: PPDS-700-IP67 series:**

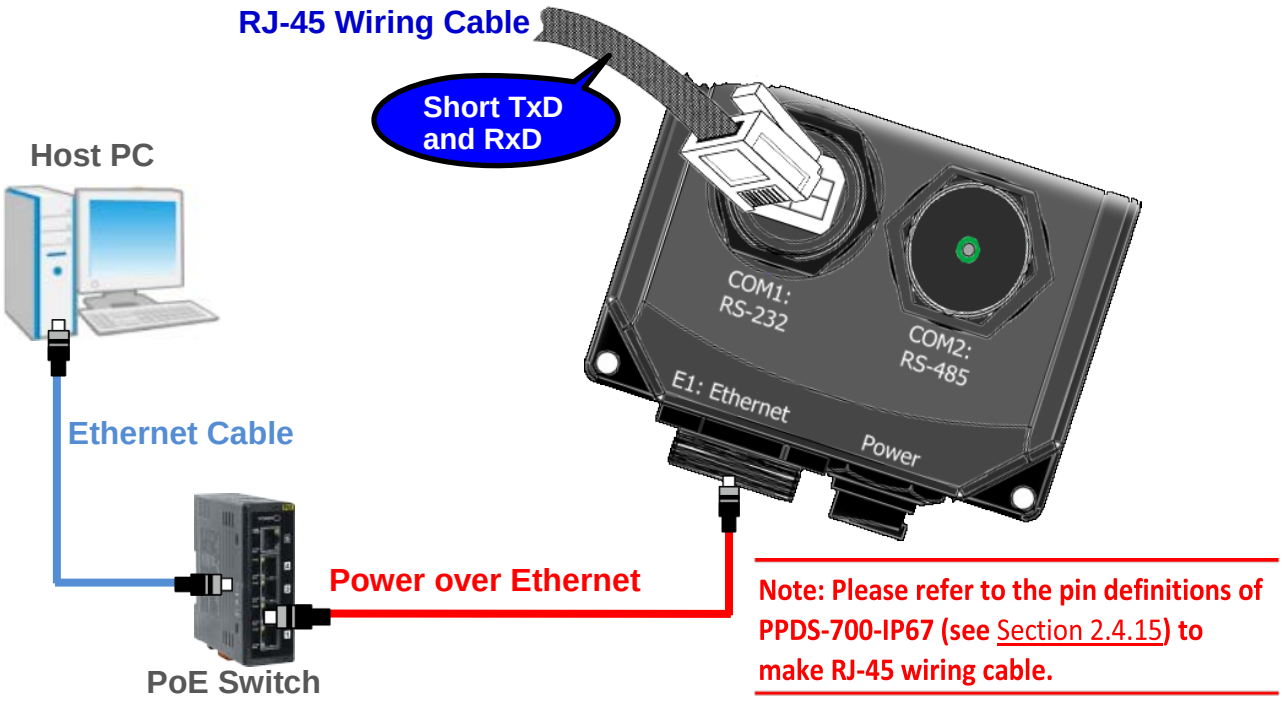

Note: Please refer to the pin definitions of PPDS-700-IP67 (see Section 2.4.15) to make RJ-45 wiring cable.

6. Verify that the System LED indicator is flashing (Red) on the PDS Series.

If your PDS series module is a **D-version module**, the 5-digit 7-SEG LED will be used to indicate the system information described in the Section 2.8 "PDS Series Diagnostics (LED Indicator)".

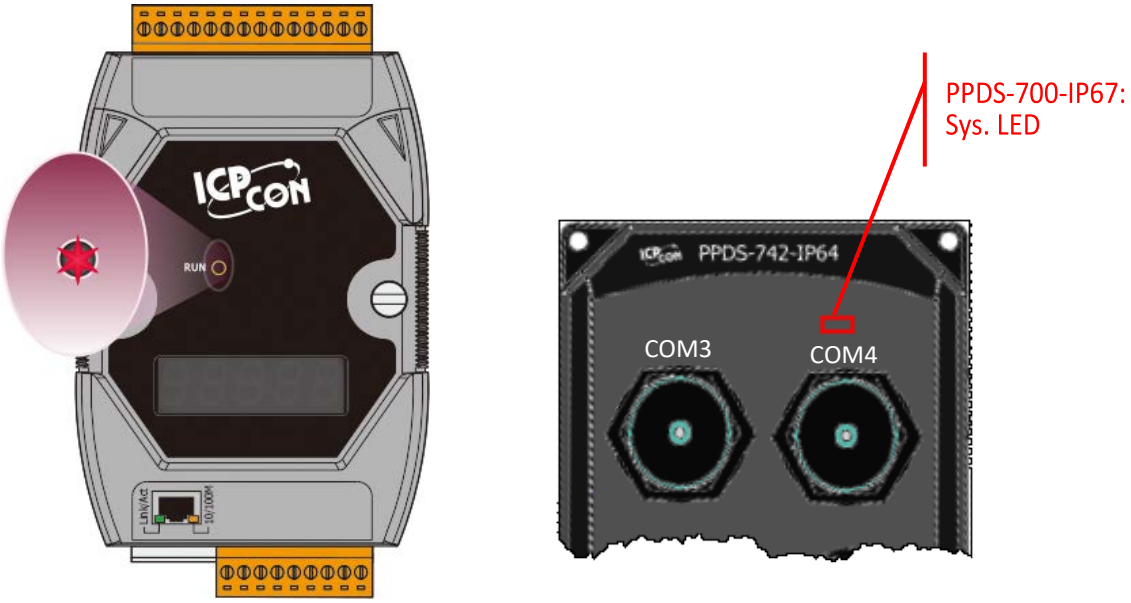

3.2 Install the VxComm Utility

The VxComm Utility can be obtained from either the ICP DAS FTP site, or the ICP DAS web site. The location of the download addresses are shown below:

http://ftp.icpdas.com/pub/cd/8000cd/napdos/driver/vxcomm_driver/windows/

ftp://ftp.icpdas.com/pub/cd/8000cd/napdos/driver/vxcomm_driver/windows/

3.3 Configuring Network Settings

1. Open the VxComm Utility and then click the **"Search Servers"** button to search for the PDS series.
2. Once the search process is complete, **double-click the name of the PDS series** to open the **"Configure Server"** dialog box.

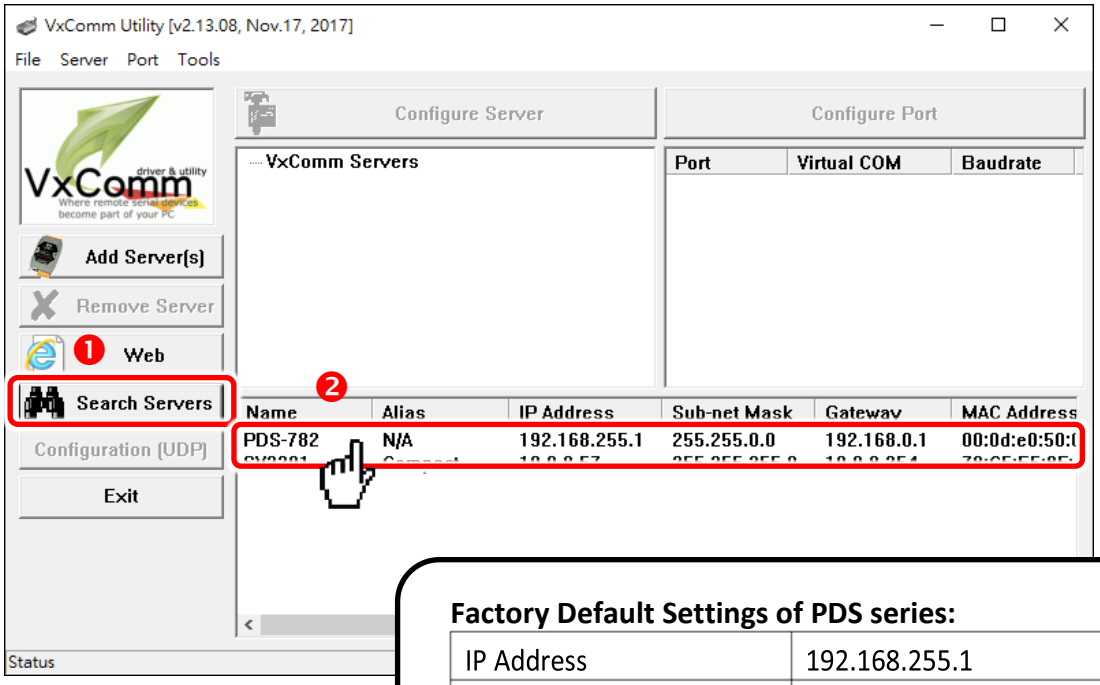

Factory Default Settings of PDS series:

IP Address	192.168.255.1
Subnet Mask	255.255.0.0
Gateway	192.168.0.1

3. Enter the network settings information, including the **IP, Mask and Gateway addresses**, and then click "**OK**" button. The new settings for the PDS series will take effect within 2 seconds. **If you don't know the correct network configuration information, contact your Network Administrator to obtain the details.**

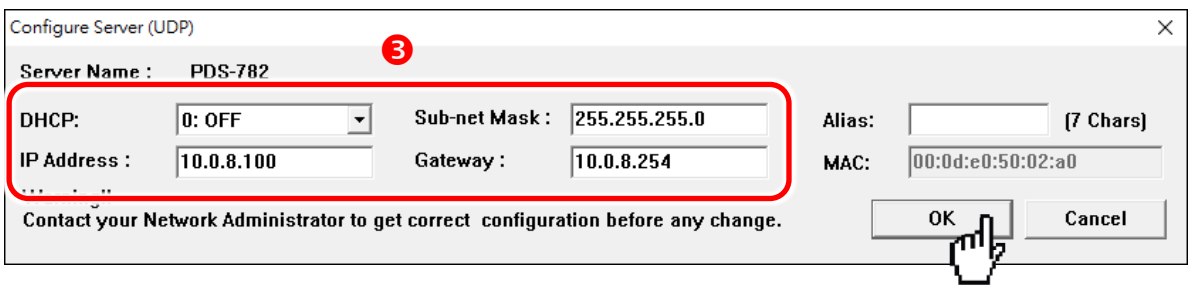

3.4 Configuring the Virtual COM Ports

1. Wait 2 seconds and then click the **"Search Servers"** button again to ensure that the PDS series is working correctly with the new configuration.
2. Click your PDS series on the list to select it.

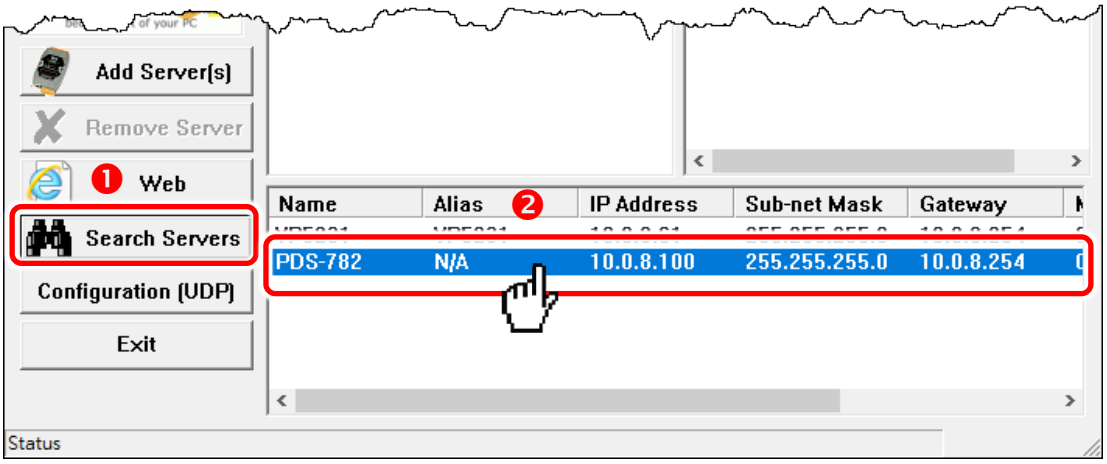

3. Click the **"Add Server[s]"** button.
4. Assign a COM Port number and click **"OK"** to save your settings.

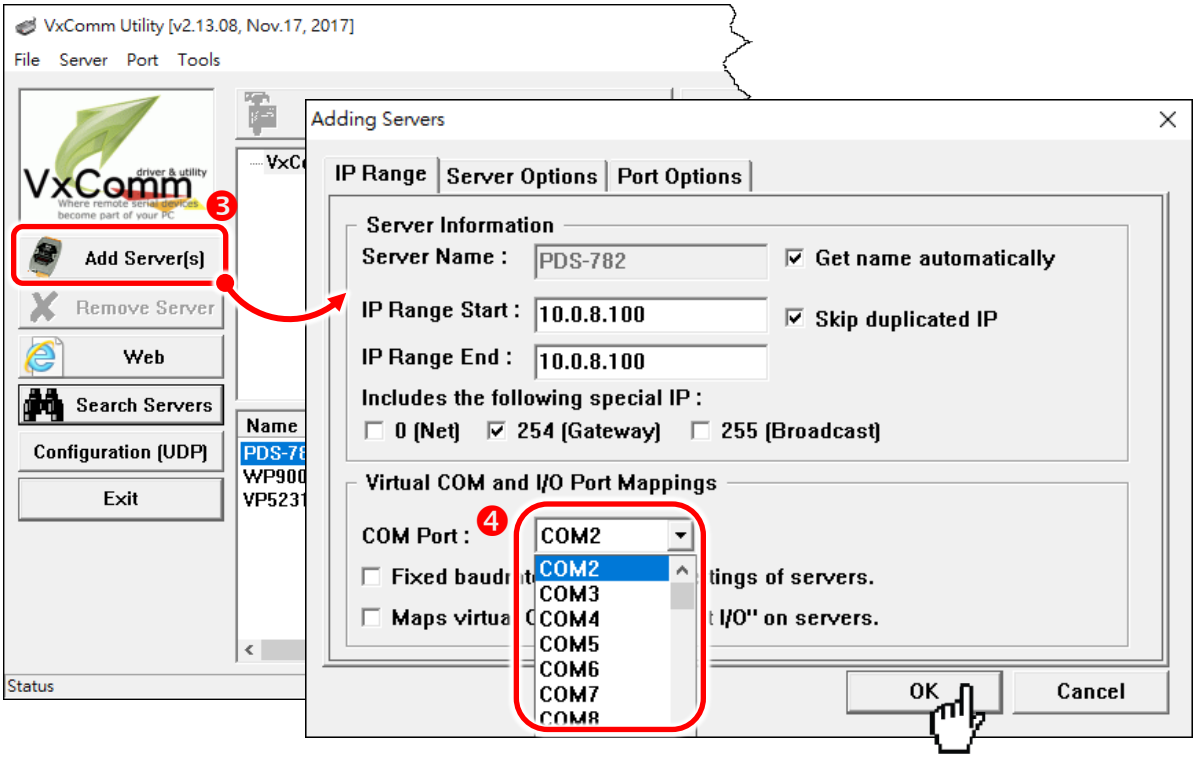

5. Click on PDS series name or slot that your module plugged in and check the virtual COM port mappings on the PC.

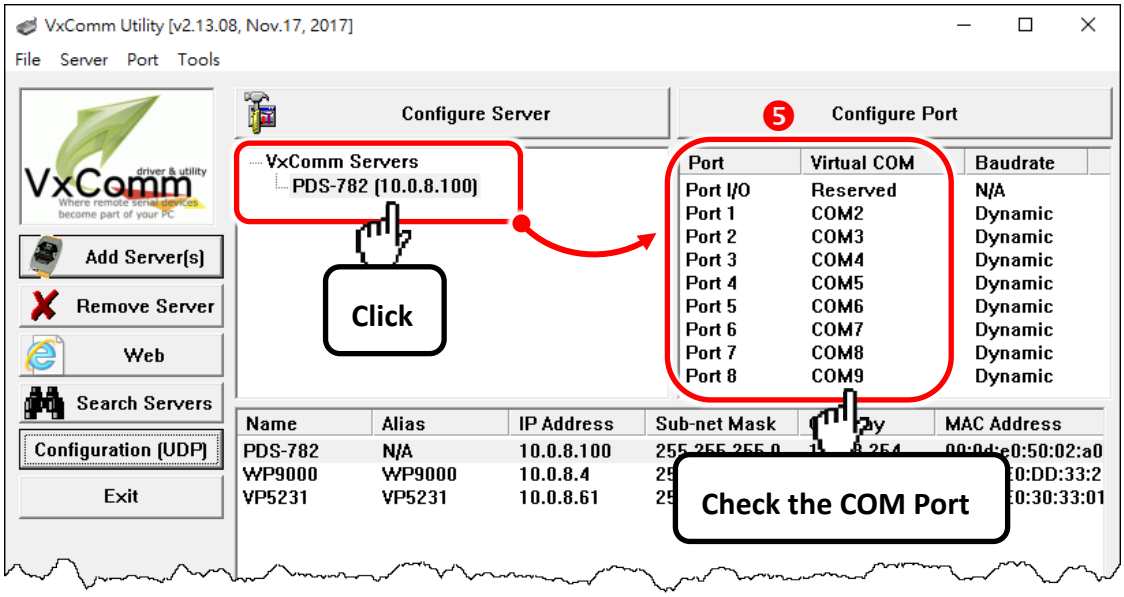

6. Click **"Tools"** → **"Restart Driver"** and click the **"Restart Driver"** button.

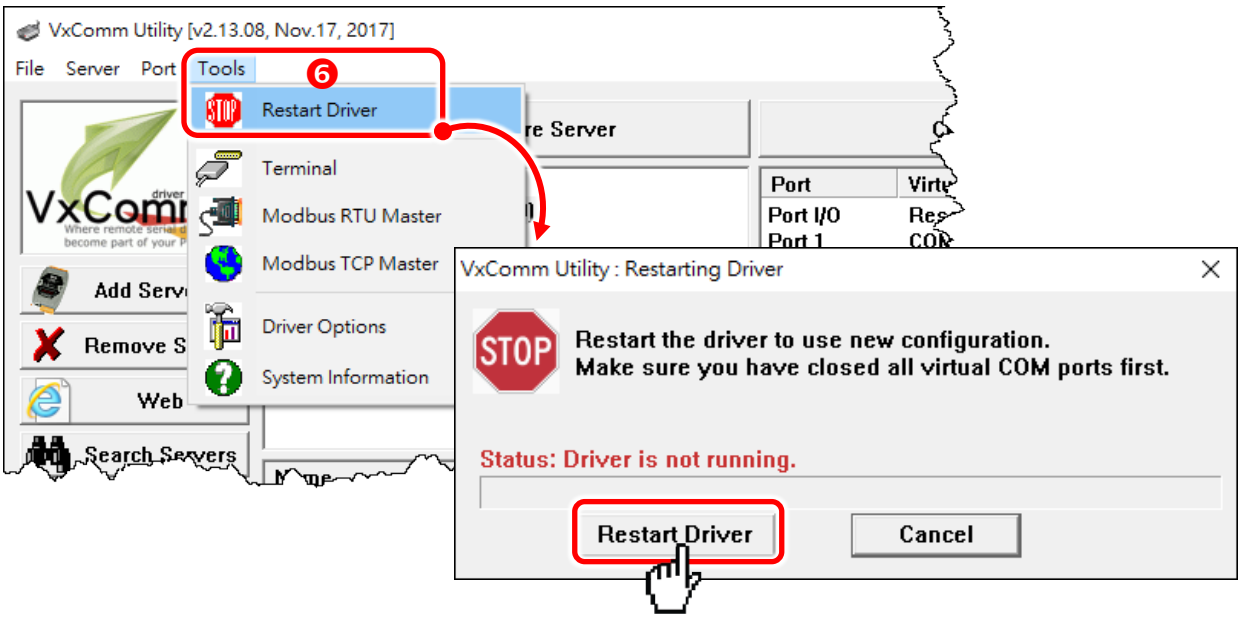

3.5 Testing your PDS Series Module

1. Click on PDS series name.
2. **Right click** Port 1 then choose the "**Open COM Port**" item.

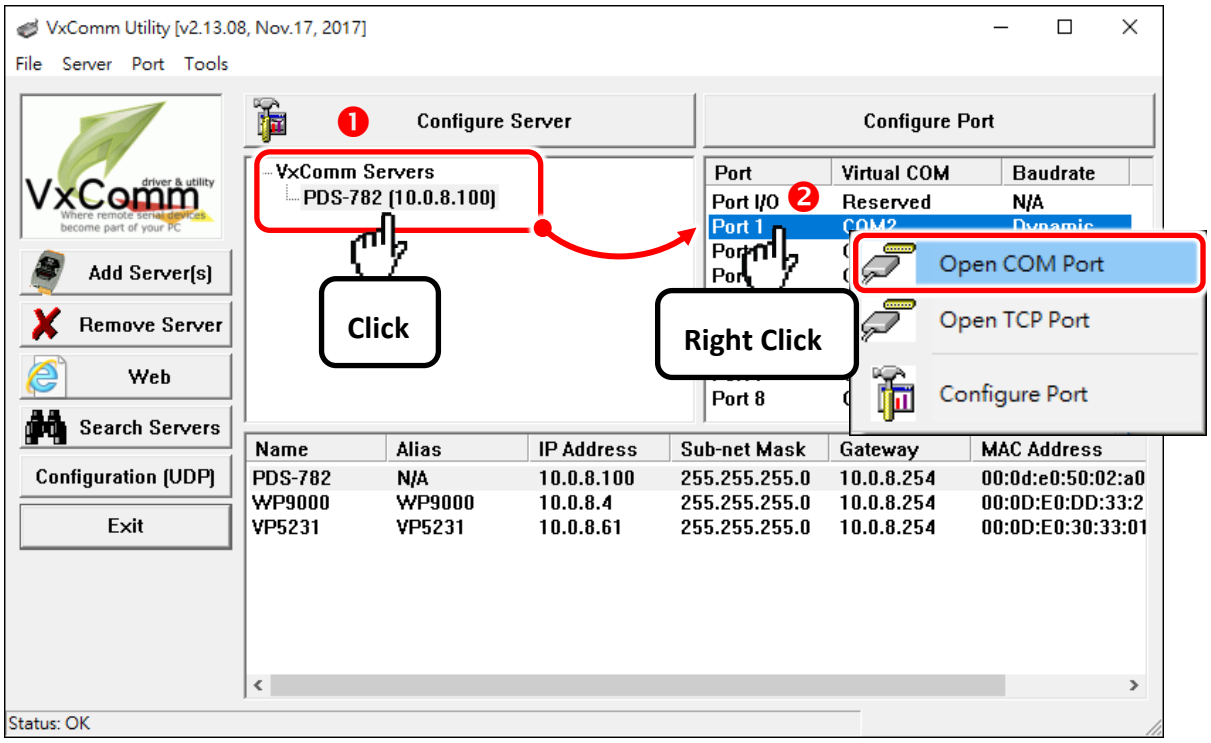

3. Check that the configuration of the COM Port is correct and click the "**Open COM**" button.

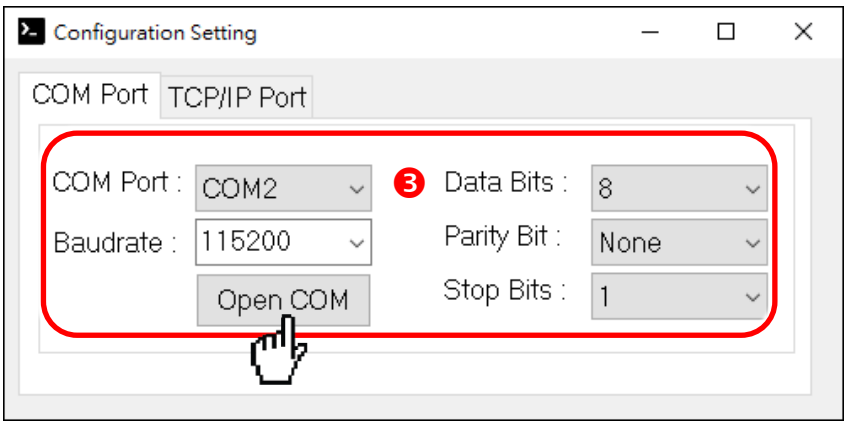

4. Type a string (default: $01M) in the **“send”** field.
5. Select **“Hex/Text”** item in the **“Display”** area.
6. Click the **“Send”** button.

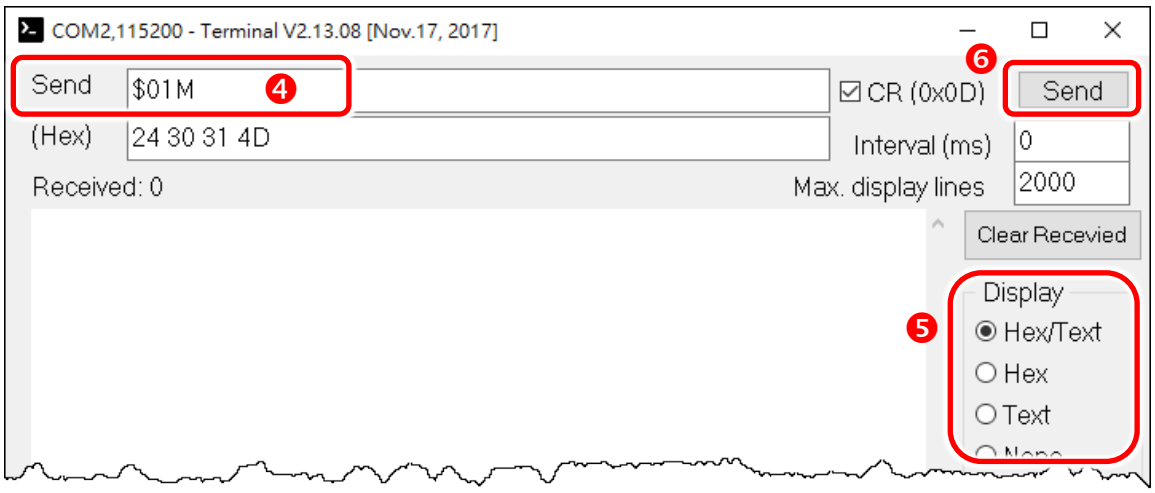

7. If a response is received, it will be displayed in the received field.

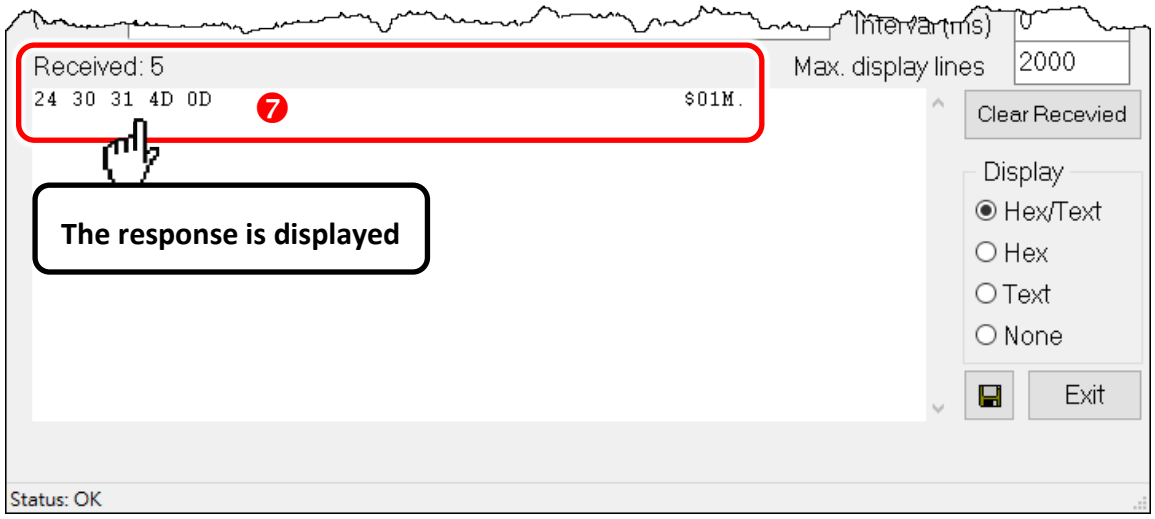

8. If the test is successful, then your COM port program should now be able to work with this Virtual COM Port.

-Complete-

4. Web Configuration

Once the PDS series has been correctly configured and is functioning on the network normally, the configuration details can be retrieved or modified using either the VxComm Utility or a standard web browser.

4.1 Logging in to the PDS Web Server

The embedded PDS series web server can be accessed from any computer that has an Internet connection.

➢ Step 1: Open a new browser window.

Open a web browser, for example, Google Chrome, Firefox or Internet Explorer, which are reliable and popular Internet browsers that can be used to configure PDS series.



➢ Step 2: Enter the URL for the PDS web server

Ensure that you have correctly configured the network settings for the PDS series (refer to Chapter 3 “Setting up the PDS Series Module” for detailed instructions), and then enter the URL address of the PDS in the address bar of the browser or click the **“Web”** button in the VxComm Utility to log in to the web configuration pages.

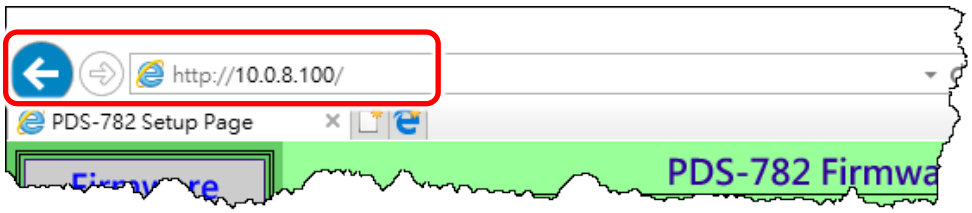

➢ Step 3: Log in to the PDS Web Server

After logging into the PDS web server, the main page will be shows **firmware information** of the PDS series module.

If you update the firmware for the PDS series, this page can be used to check the version information of the PDS software.

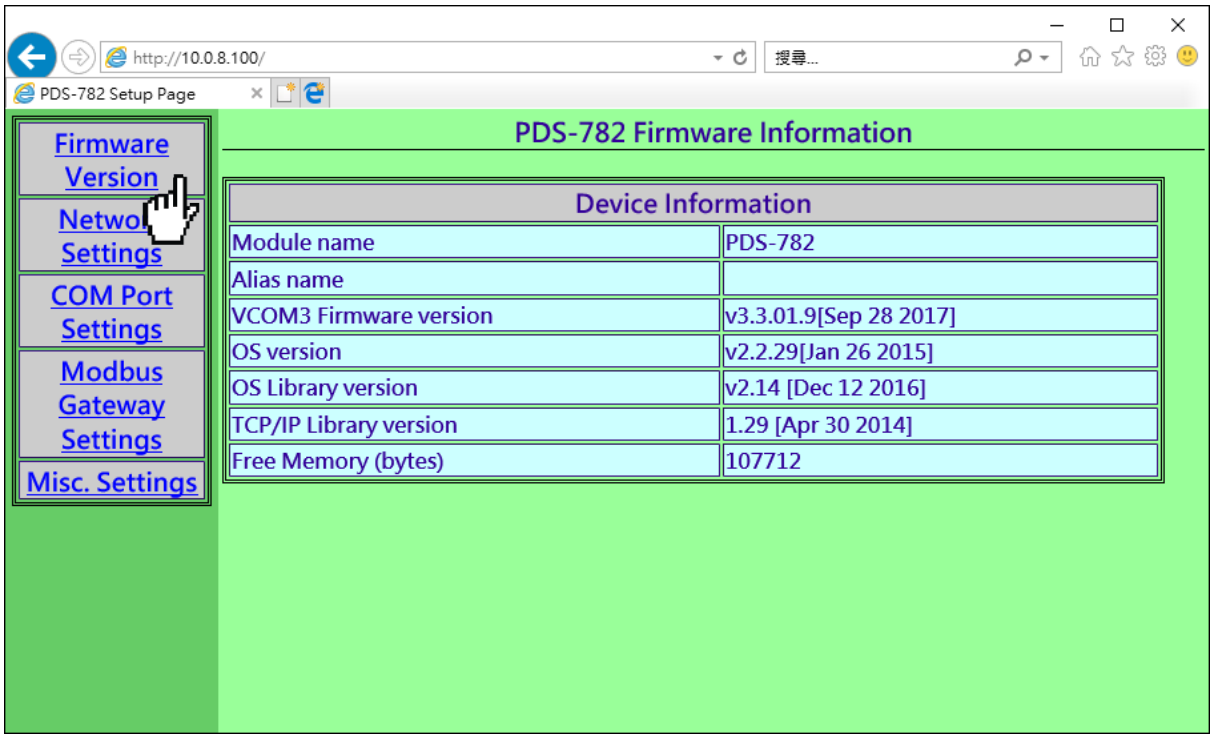

4.2 Network Settings

The **Network Settings** section provides information related to most important network settings for the PDS series, including the **IP Address, Subnet Mask** and **Default Gateway** values, etc., each of which will be described in more detail below.

If they do not match, the PDS series will not operate correctly. If the settings are changed while the module is operating, any connection currently in use will be lost and an error will occur.

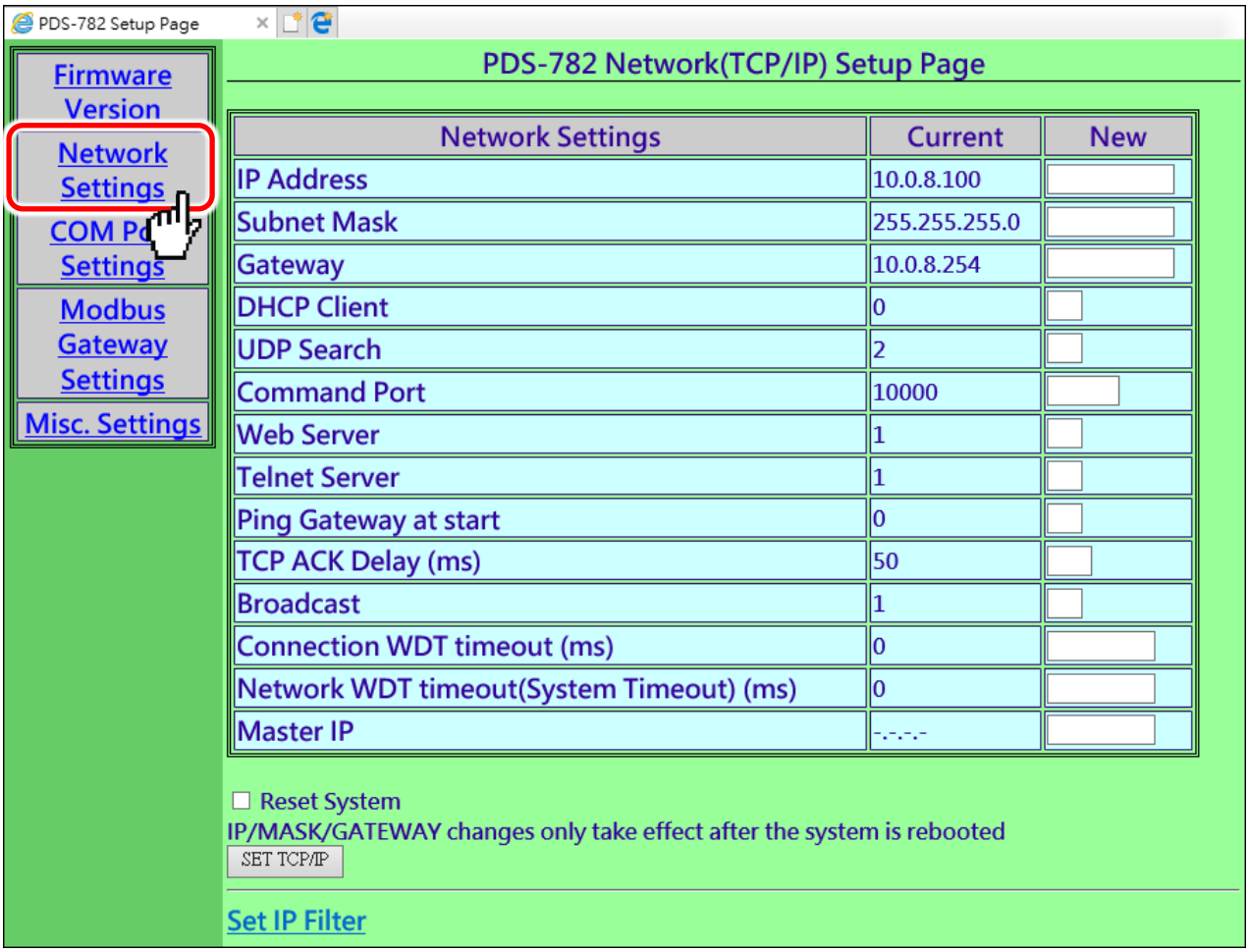

The following is an overview of the parameters contained in the **Network Settings** section:

Item	Description	Default
IP Address	If no DHCP server is installed on the network, the network settings can be configured manually.	
Subnet Mask	This parameter is used to assign the subnet mask for the PDS series. The subnet mask indicates which portion of the IP address is used to identify the local network or subnet.	
Gateway	This parameter is used to assign the IP Address of the Gateway to be used by the PDS series. A Gateway (or router) is a device that is used to connect an individual network to one or more additional networks.	
DHCP Client	This parameter is used to enable or disable DHCP Client configuration function. It is recommended that the DHCP Client setting is kept as disabled, and using static network settings. This ensures your PDS series always using a fixed IP address, and you don't need to configure the virtual COM mappings again and again. 0 = Disabled, 1 = Enabled	
UDP Search	This parameter is used to enable or disable UDP Search function. 0 = Disabled 1 = Enabled 2 = Enable the UDP Search function until another client is connected. By keeping the UDP search setting as 2, the PDS series loading will be reduced. The VxComm Utility will not be able to search for this module until this module's clients are all disconnected.	2
Command Port	This parameter is used to configure the TCP Command Port to a custom value depending on your requirement. ⚠ **Note that if the TCP Command Port configuration setting is completed, the TCP port of serial port will be change, as follows:** **COM1= TCP Command Port + 1** **COM2= TCP Command Port + 2** The default TCP Command Port is 10000. Thus, the serial COM port1/port2 is 10001/10002, and so on.	10000

Item	Description	Default
Web Server	This parameter is used to enable or disable Web Server function. If the web server has been disabled (Web Server=0), refer to FAQ: "How to enable web server for the PDS/7188EN Series module" to enable PDS web server. 0 = Disabled, 1 = Enabled	1
Telnet Server	This parameter is used to enable or disable Telnet Server function. 0 = Disabled, 1 = Enabled	1
Ping Gateway at start	If the setting is 1 (enabled), the PDS series will send a ping packet to the gateway during the power-on stage. It is used to inform the gateway that a PDS series (itself) has joined the network. 0 = Disabled, 1 = Enabled	0 (Disabled)
TCP ACK Delay (ms)	PDS series does not want to send an empty ACK followed by a TCP data packet 1ms later, every time. So it delays a little (TCP ACK Delay), and then can combine the ACK and data packet into one. This efficiency reduces the number of packets and reduces network loadings.	50 ms
Broadcast	This parameter is used to receive or reject UDP broadcast packets. 1 = receive UDP broadcast packets 0 = reject UDP broadcast packets	1
Connection WDT timeout (ms)	If the PDS series does not receive any data from a client PC within the period of the "Connection WDT timeout", the module will close the connection to the client. 0 = Disabled, Min. setting value = 10000	0 (Disabled)

Item	Description	Default
Network WDT timeout (System Timeout) (ms)	If the PDS series does not receive any data from any of the clients within the period of the **"Network WDT timeout"**, the module will reboot itself. This setting is the same as **"SystemTimeout"** setting (unit: ms) on Console/Telnet command, and is the same as **"/STxxx"** in command line parameter (unit: seconds). When user uses **"config=RESET"** Console/Telnet command to clear the EEPROM, the **"Network WDT timeout"** (SystemTimeout, /ST) setting will also be cleared to 0. Users have to configure this setting again by "SystemTimeout" Console/Telnet command. 0 = Disabled Min. setting value = 30000	0 (Disabled)
Master IP	If the Master IP is set, only the client using Master IP can change the COM Port configuration. It is to prevent the COM Port configuration changed by other clients.	empty
Reset System	If the "**Reset System**" option is checked, the PDS series will reboot itself after the saving operation is complete, otherwise the original settings will still be valid until the next power-on. 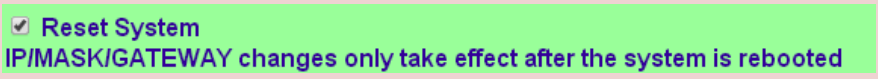	
SET TCP/IP	Click this button to save the revised settings to the PDS series.	

4.2.1 Set IP Filter

The **Set IP Filter** limits which client PCs are able to link to the PDS series via specific IP addresses. When one or more IP addresses are set in the filter table, only client PCs where the IP address is included in the range listed of the filter table will be able to connect to the PDS series. Any requests from other PCs will be rejected.

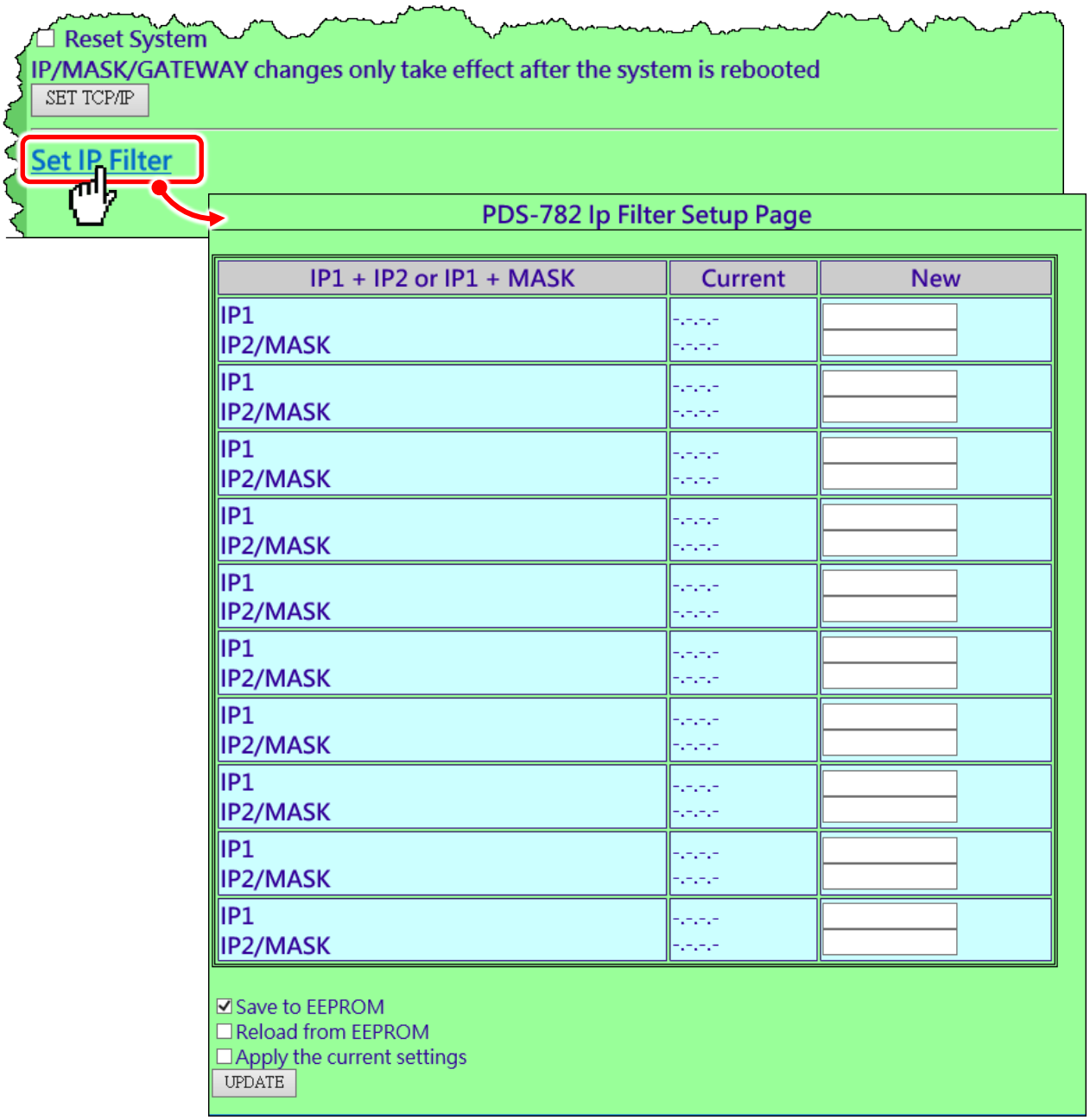

The following is an overview of the parameters contained in the **IP Filter Setup Page** section:

Item	Description
Set IP1 only	Set a single IP address, the IP address entered in the **"IP1"** and **"IP2/MASK"** text fields will be the same, as the image below shows. Only clients who's IP address is included in the filter table are able to connect to the PDS series. 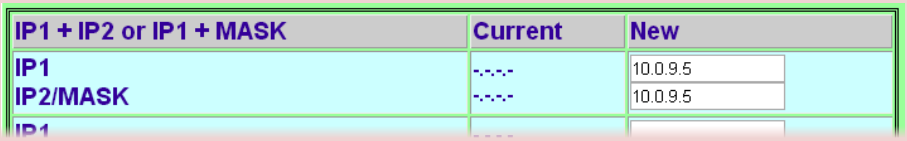
Set IP1 + IP2	Set a range of IP address as a starting and ending point. The initial IP address must be entered in the **"IP1"** text field and final IP address must be entered in the **"IP2/MASK"** text field, as the image below shows. 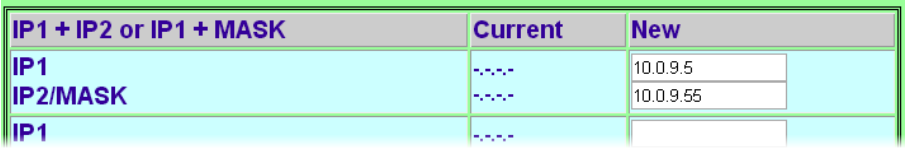 This allows clients who's IP address is included in the range of **10.0.9.5 to 10.0.9.55** are able to connect to the PDS series.
Set IP1 + Mask	Set the IP Filter (Available IP) range, the IP address must be entered in the **"IP1"** text field and Mask address must be entered in the **"IP2/MASK"** text field, as the image below shows. 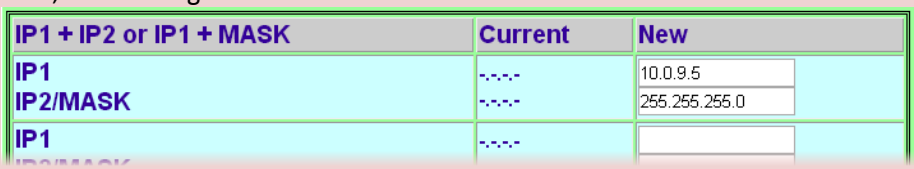 This allows clients who's IP address is included in the range of **10.0.9.0 to 10.0.9.255** are able to connect to the PDS series. ⚠ **Note that how to get the IP address range 10.0.9.0 to 10.0.9.255? It's calculated as follows:** **Formula: (IP1 & MASK) to (IP1 & Mask) + (~MASK)** ↓ **(10.0.9.5 & 255.255.255.0) to (10.0.9.5 & 255.255.255.0) + (0.0.0.255)** ↓ **(10.0.9.0) to (10.0.9.0) + (0.0.0.255)** ↓ **10.0.9.0 to 10.0.9.255**

Item	Description
Save to EEPROM	If the **"UPDATE"** button is clicked with checking "**Save to EEPROM**" option, the new settings will be saved to the PDS series only and the new settings will be valid after the next power-on.
Reload from EEPROM	If the **"UPDATE"** button is clicked with checking "**Reload from EEPROM**" option, PDS series can apply the settings from EEPROM immediately.
Apply the current settings	If the "**Apply the current settings**" checked when the **"UPDATE"** button is clicked, the new settings will be valid immediately.
UPDATE	Click this button to save the revised settings to the PDS series.

Note:

After configuring IP filter settings, please confirm that the "Save to EEPROM" and "Apply the current settings" option are checked, and then click the "UPDATE" button.

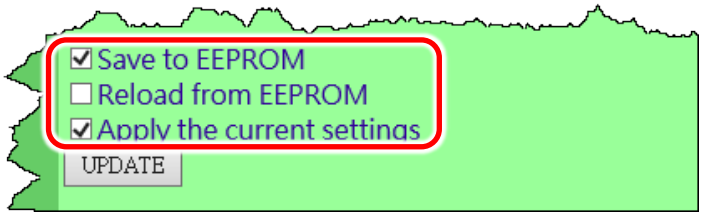

4.3 COM Port Settings

The **COM Port Settings** section provides functions allowing items such as baud rate, data format, data transmission mode and pair-connection settings, etc. to be configured, each of which will be described in more detail below.

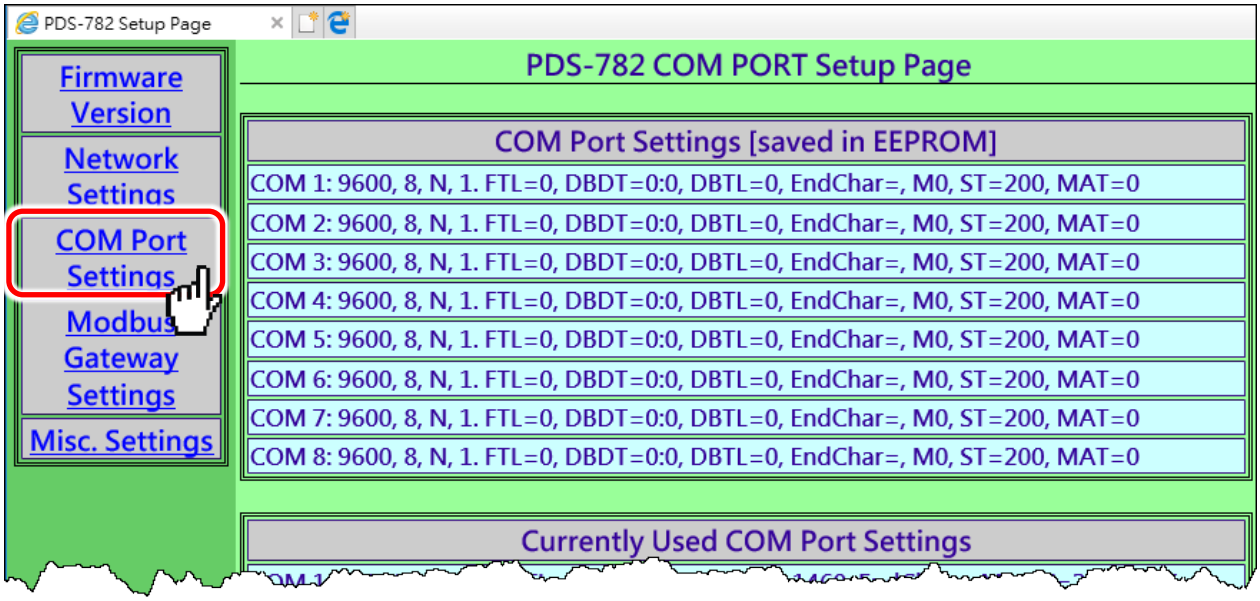

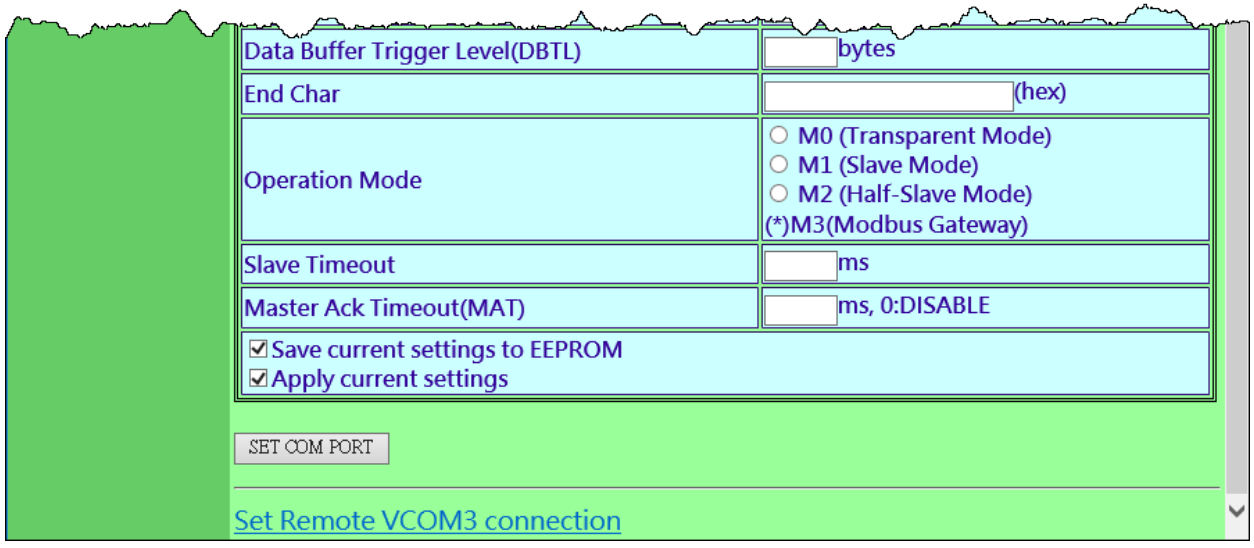

- The COM Port Settings list is saved in the EEPROM on the PDS series.

COM Port Settings [saved in EEPROM]
COM 1: 9600, 8, N, 1. FTL=0, DBDT=0:0, DBTL=0, EndChar=, M0, ST=200, MAT=0
COM 2: 9600, 8, N, 1. FTL=0, DBDT=0:0, DBTL=0, EndChar=, M0, ST=200, MAT=0
COM 3: 9600, 8, N, 1. FTL=0, DBDT=0:0, DBTL=0, EndChar=, M0, ST=200, MAT=0
COM 4: 9600, 8, N, 1. FTL=0, DBDT=0:0, DBTL=0, EndChar=, M0, ST=200, MAT=0
COM 5: 9600, 8, N, 1. FTL=0, DBDT=0:0, DBTL=0, EndChar=, M0, ST=200, MAT=0

- The Currently Used COM Port Settings list.

Currently Used COM Port Settings
COM 1: 115200, 8, N, 1. FTL=1, DBDT=0:2, DBTL=1460, EndChar=, M0, ST=200, MAT=0
COM 2: 9600, 8, N, 1. FTL=1, DBDT=0:3, DBTL=1460, EndChar=, M0, ST=200, MAT=0
COM 3: 9600, 8, N, 1. FTL=8, DBDT=0:13, DBTL=256, EndChar=, M3, ST=200, MAT=0
COM 4: 9600, 8, N, 1. FTL=8, DBDT=0:13, DBTL=1460, EndChar=, M0, ST=200, MAT=0

- The COM Port Settings area.

Configure COM PORT	
Port (COM0 for ALL PORTS)	COM 1
Baud Rate	9600
Data Bits	8
Parity	None
Stop Bits	1
Rx FIFO Trigger Level	1
Data Buffered Delay Time(DBDT)	ms
Data Buffer Trigger Level(DBTL)	bytes
End Char	(hex)
Operation Mode	○ M0 (Transparent Mode) ○ M1 (Slave Mode) ○ M2 (Half-Slave Mode) (*)M3(Modbus Gateway)
Slave Timeout	ms
Master Ack Timeout(MAT)	ms, 0:DISABLE
☑ Save current settings to EEPROM ☑ Apply current settings	

SET COM PORT

Set Remote VCOM3 connection

The following is an overview of the parameters contained in the **Configure COM Port** section:

Item	Description	Default
Port (COM0 for ALL PORTS)	The COM Port number on the PDS series.	COM1
Baud Rate	This parameter is used to set the Baud Rate for the COM ports.	9600
Data Bits	This parameter is used to set the Data Size for the COM ports.	8
Parity	This parameter is used to set the Parity for the COM ports.	None
Stop Bits	This parameter is used to set the Stop Bits for the COM ports.	1
Rx FIFO Trigger Level	This option is used to set the number of characters that the COM Port can receive at once time, the PDS series will move the data from the COM Port FIFO to the PDS series. If the amount of data transferred is large and uses a transfer speed (115200 bps), setting a smaller value is helpful in preventing data loss.	1
Data Buffered Delay Time (DBDT)	When the COM port does not receive data from devices connected over the period of DBDT setting, the PDS series will determine that the data transfer is over and return to process next tasks.	0
Data Buffered Trigger Level (DBTL)	Set the receive buffer size. When the buffer receives the data reaches to value, it will be sent out. Settings range: 1 ~ 1460 Bytes	1460
End Char	The PDS series outputs an Ethernet packet immediately after the ending-chars pattern is identified from the incoming serial data.	0 (Disabled)
Operation Mode	M0: Transparent Mode (Multi-echo mode) M1: Slave Mode (Single-echo mode) M2: Half-Slave Mode (Is situated between M0 and the M1 mode) M3: Modbus Gateway The more detailed information regarding M0, M1, M2 and M3 modes, please refer to the Section 4.3.1 "Operation Mode: M0, M1, M2 and M3".	M0

Item	Description	Default
Slave Timeout	In M1 (Slave Mode), the slave mode timeout setting is use to set the waiting time after last character of the request sent to the device. If the device does not respond within the timeout value, the PDS series will return a timeout error and process next request.	200 ms
Master ACK Timeout (MAT)	If the PDS series does not receive any data from Slave for a certain period, the PDS series will return an ACK character to Master and process next request based on the configured timeout value.	0 (Disabled)
Save current settings to EEPROM	If the **"SET COM PORT"** button is clicked with checking "**Save current settings to EEPROM**" option, the new settings will be saved to the PDS series only and the new settings will be valid after the next power-on.	
Apply current settings	If the "**Apply current settings**" checked when the **"SET COM PORT"** button is clicked, the new settings will be valid immediately.	
SET COM PORT	Click this button to save the revised settings to the PDS series.	

Note:

After configuring COM Port Settings, please confirm that the "Save current settings to EEPROM" and "Apply current settings" option are checked, and then click the "SET COM PORT" button.

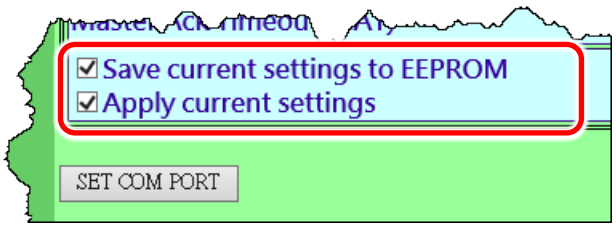

4.3.1 Operation Mode: M0, M1, M2 and M3

M0: Transparent Mode (Multi-echo, shared)

M0 is used for Virtual COM and TCP/IP connections. In this mode, data is transmitted to each client that is connected to the PDS series module.

Condition 1: One client sends a request to the PDS series to access a device. The PDS series transmits the data from device to each connected client.

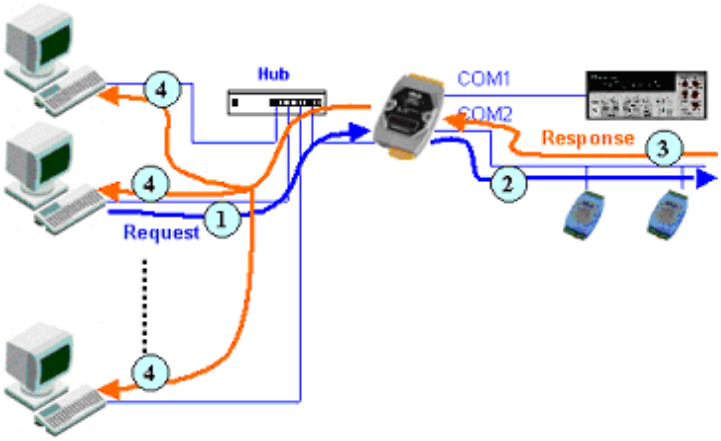

Condition 2: No clients send any requests to the PDS series. The PDS series transmits data from the device to each connected client.

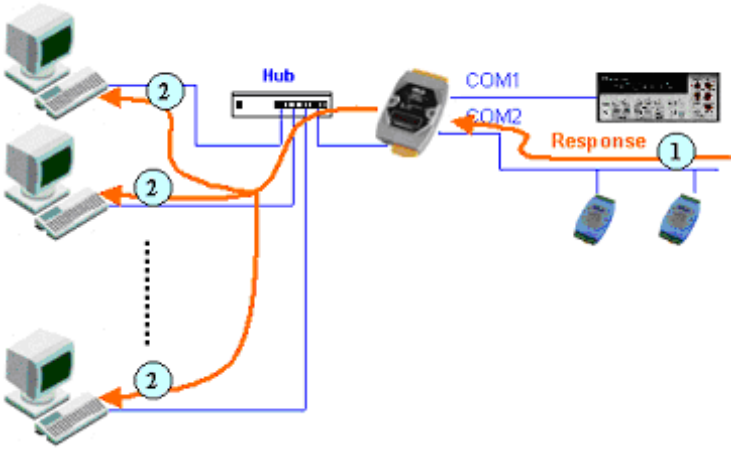

M1: Slave Mode (Single-echo, Non-shared)

M1 is used for Virtual COM and TCP/IP connections. In this mode, data is transmitted to the specific client that requested the service. If the client does not send a request to the COM port of the PDS series module, then the module won't return any data to it.

Condition 1: One client sends a request to the PDS series to access a device. The PDS series transmits data from the device to the client that requested the service.

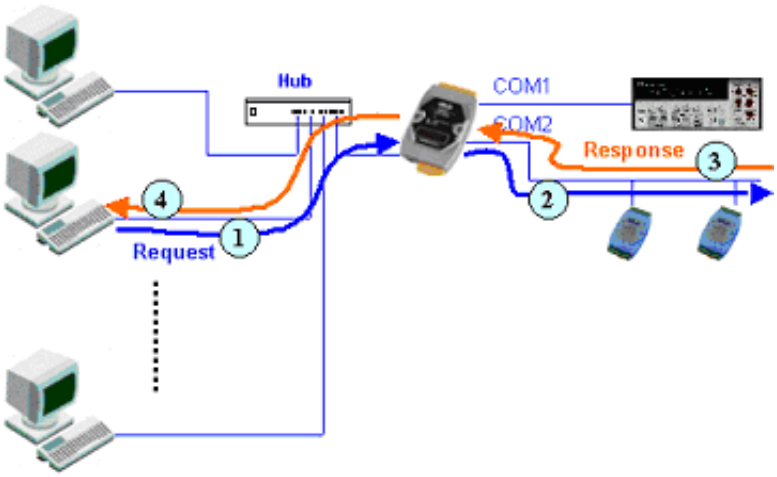

Condition 2: No clients send any requests to the PDS series. The PDS series doesn't transmit any data from the device to any client.

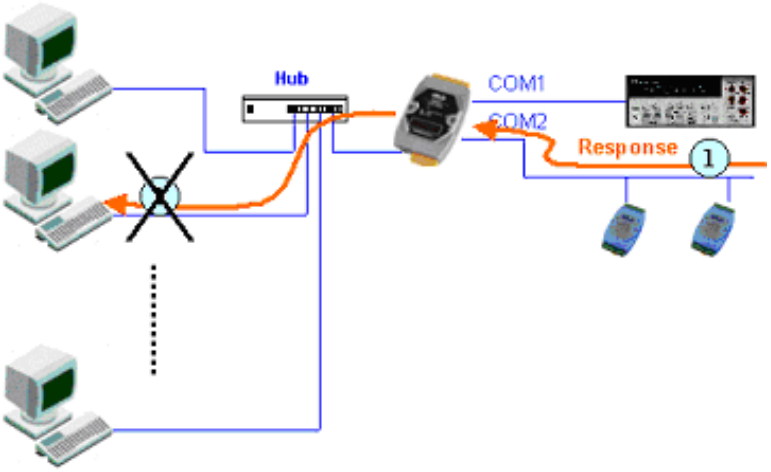

M2: Half-Slave Mode (Is situated between M0 and the M1 mode)

M2 is used for Virtual COM and TCP/IP connections. If only one client connects to the PDS series, the operation mode same as M0 mode (Multi-echo, shared), refer to Section "M0: Transparent Mode". If there are two or more clients connecting to the PDS series, the operation mode same as M1 mode (Single-echo, Non-shared), refer to Section "M1: Slave Mode". PDS sends data to the last client when data is available but no request from any client.

M3: Modbus Gateway

When PDS series are configured to Modbus Gateway, the operation mode will be automatically set to M3 mode. The more detailed information regarding configuring Modbus Gateway, refer to Section 4.4 "Modbus Gateway Settings" and Chatper 5 "Modbus Testing and Protocol".

4.3.2 Set Remote VCOM3 Connection

Clicking the **"Set Remote VCOM3 Connection"** will display the **PDS Remote Vcom3 connection Setup Page** allowing your enable and configure the pair connections for the PDS series, which will be described in more detail below.

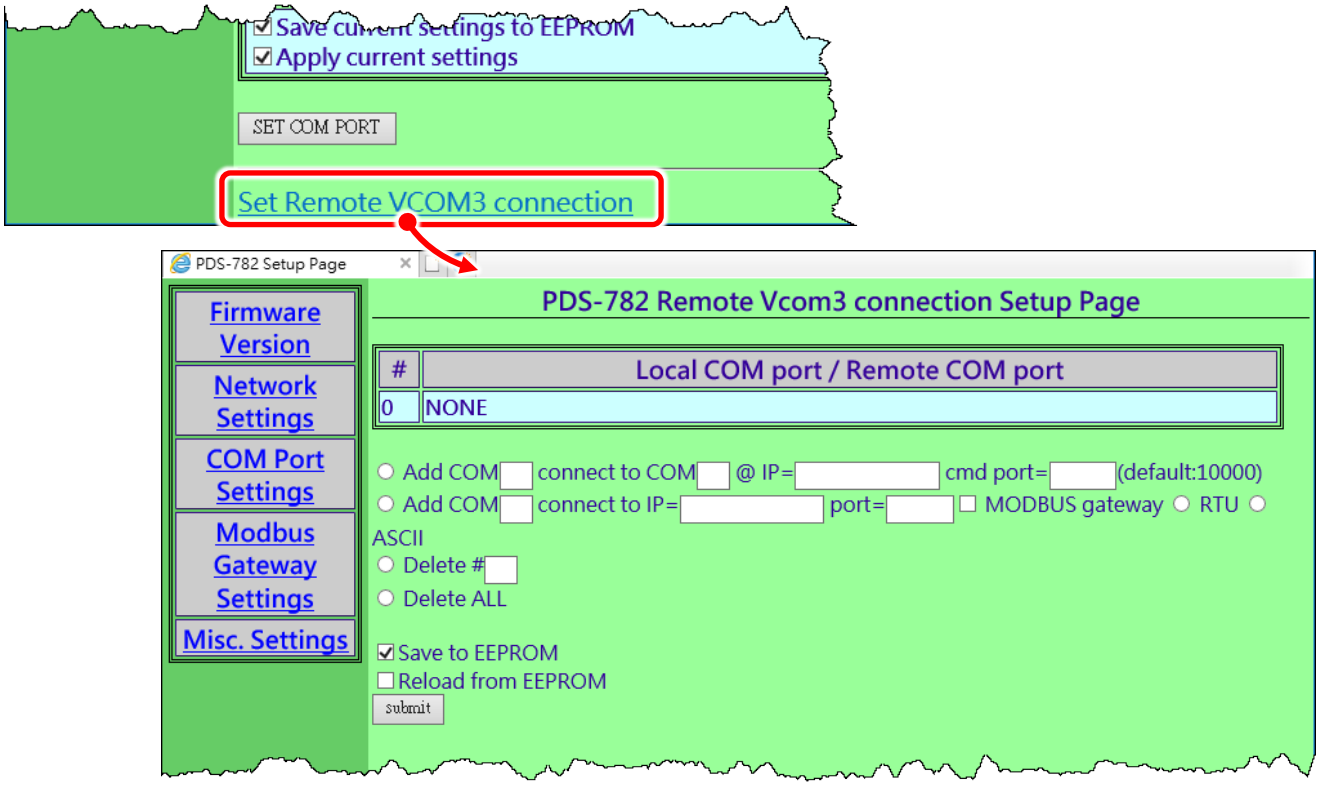

The following is an overview of the parameters contained in the **Remote Vcom3 connection Setup Page** section:

Item	Description
Add COM "Number"	Serial COM port number of the local device (Master)
connect to COM "Number"	Serial COM port number of the remote device (Slave)
@ IP= "IP Address"	IP address of the remote device (Slave)
cmd port= "command port" (default: 10000)	Command Port number of the remote device (Slave)
Add COM "Number"	Serial COM port number of the local device (Master)
connect to IP= "IP Address"	IP address of the remote device (Slave)
Port= "TCP port"	TCP Port number of the remote device (Slave)
MODBUS gateway	If the "MODBUS gateway" checked, the serial port is specified as gateway from the Modbus RTU or Modbus ASCII (Master) to Modbus TCP for the remote device (Slave)

Item	Description
Delete # "Number"	Delete a specific # "Number" from the Pair-connection List.
Delete All	Delete all items from the pair-connection List.
Save to EEPROM	If the **"submit"** button is clicked with checking "**Save to EEPROM**" option, the new settings will be saved to the PDS series only and the new settings will be valid after the next power-on.
Reload from EEPROM	If the **"submit"** button is clicked with checking "**Reload from EEPROM**" option, PDS series can apply the settings from EEPROM immediately.
Submit	Click this button to save the revised settings to the PDS series.

Note:

After setting the pair-connection functions, please power-on reboot the PDS series, and then setting is complete.

4.4 Modbus Gateway Settings

The **"Modbus Gateway Settings"** section provides sets the Modbus Gateway functions for PDS series, including the Modbus device ID, Modbus Protocol, TCP/UDP port and timeout values, etc., which will be described in more detail below. The more detailed information regarding Modbus Gateway applications settings, refer to Chatper 6 "Modbus Testing and Protocol".

Note:
Starting from the firmware version v3.3.01.4 [Apr. 12 2016], the DS-700 and PDS(M)-700(D) series modules support Modbus Gateway function.

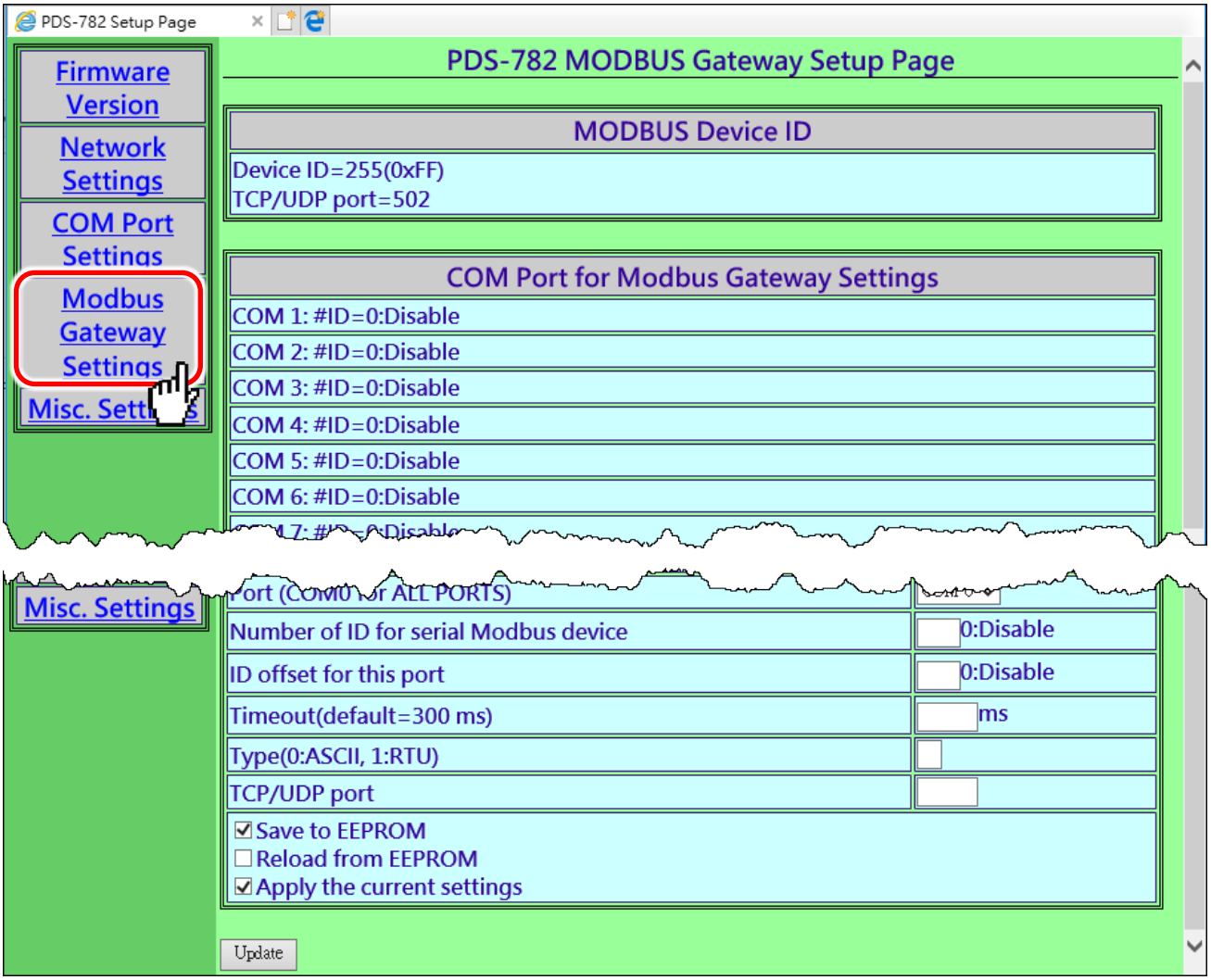

- Check the Modbus Device ID of PDS series module

⚠ **Note: This ID setting is not used for your Modbus slave device.**

MODBUS Device ID
Device ID=255(0xFF) TCP/UDP port=502

- Check the COM Port for Modbus Gateway settings:

COM Port for Modbus Gateway Settings
COM 1: #ID=0:Disable
COM 2: #ID=0:Disable
COM 3: #ID=0:Disable
COM 4: #ID=0:Disable

- The COM Port Settings section:

Configure COM PORT	
Device ID for PDS-782	
Port (COM0 for ALL PORTS)	COM 0
Number of ID for serial Modbus device	0:Disable
ID offset for this port	0:Disable
Timeout(default=300 ms)	ms
Type(0:ASCII, 1:RTU)	
TCP/UDP port	
☑ Save to EEPROM ☐ Reload from EEPROM ☑ Apply the current settings	

Update

The following is an overview of the parameters contained in the **Configure COM Port** section:

Item	Description
Device ID for PDS	This parameter is used to configure the device ID of PDS series. ⚠ **Note: This ID setting is not used for your Modbus slave device.** The default Device ID = 255 (0xFF)
Port (COM 0 for ALL PORTS)	This parameter is used to select the COM Port number on the PDS series.
Number of ID for serial Modbus device	This parameter is used to configure the slave device ID range of your Modbus device. 0 = Disable
ID offset for this Port	This parameter is used to set the slave device ID offset. For example: Virtual Device ID (Device ID of Modbus command) = 3, Offset = 2, Physical Device ID (Modbus Device) = 5
Timeout (default = 300 ms)	If the PDS series does not receive any data from RTU Slave for a certain period, the PDS series will return a timeout error to PC based on the configured timeout value.
Type (0: ASCII, 1: RTU)	This parameter is used to configure the serial port that is used by the Modbus RTU or Modbus ASCII protocol.
TCP/UDP port	This parameter is used to configure the Modbus TCP/UDP port. **The default COM1 = TCP/UDP Ports 502**
Save to EEPROM	If the **"Update"** button is clicked with checking "**Save to EEPROM**" option, the new settings will be saved to the PDS series only and the new settings will be valid after the next power-on.
Reload from EEPROM	If the **"Update"** button is clicked with checking "**Reload from EEPROM**" option, PDS series can apply the settings from EEPROM immediately.
Apply the current settings	If the "**Apply the current settings**" checked when the **"Update"** button is clicked, the new settings will be valid immediately.
UPDATE	Click this button to save the revised settings to the PDS series.

⚠ **Note:**

After configuring IP filter settings, please confirm that the "Save to EEPROM" and "Apply the current settings" option are checked, and then click the "UPDATE" button.

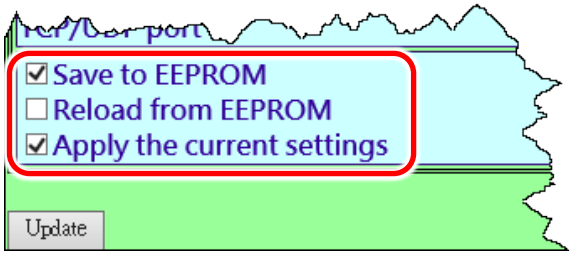

4.5 Misc. Settings

The **Miscellaneous Settings** provides functions allowing items such as the alias name, Web read only, restore factory default and change password to be configured, each of which will be described in more detail below.

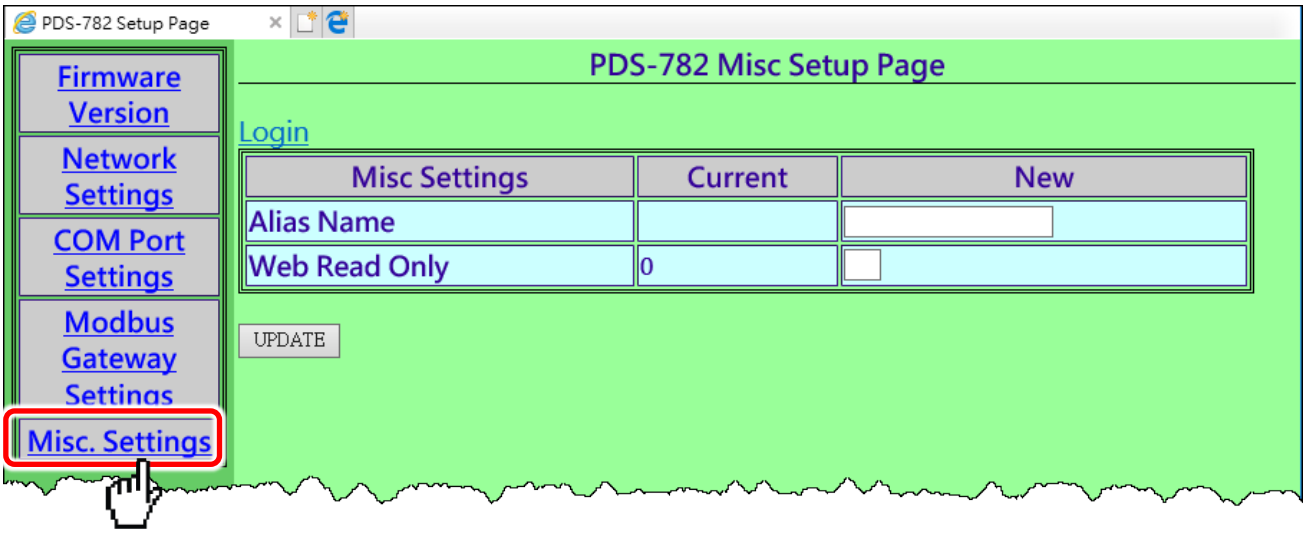

The following is an overview of the parameters contained in the **Misc Setup Page** section:

Item	Description
Login	Click the this tab to proceed to the Login page that can disable **"Web Read Only"** property, change password and Restore to Factory Default Settings, refer to the Sections 4.5.1 "Disable the "Web Read Only" Function, Section 4.5.2 "Change Password" and Section 4.5.3 "Restore to Factory Default Settings" for more detail information.
Alias Name	This parameter is used to assign an alias for each PDS series to assist with easy identification.
Web Read Only	This parameter is used to enable **"Web Read Only"** function. If the "**Web Read Only**" properly is set to 1 (Enabled), the web server will **not** be able to save any new configurations to the PDS series. The default setting should be 0 (Disabled). 0 = Disabled, 1 = Enabled
UPDATE	Click this button to save the revised settings to the PDS series.

4.5.1 Disable the "Web Read Only" Function

The following instructions guide you to disable the **"Web Read Only"** function.

Step 1: Click the "**Login**" tab at the PDS Misc Setup Page to proceed to the Login Page.

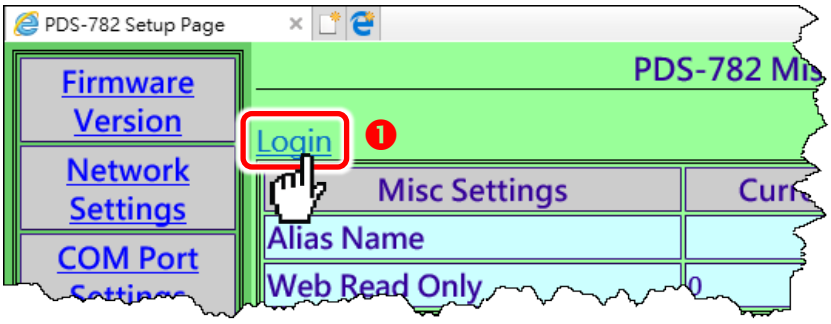

Step 2: Enter the password in the **"PASSWORD:"** field (use the default password **"admin"**) and click the "**LOGIN**" button to proceed to the settings page. If you want to change default password, please refer to Section 4.5.2 "Change Password".

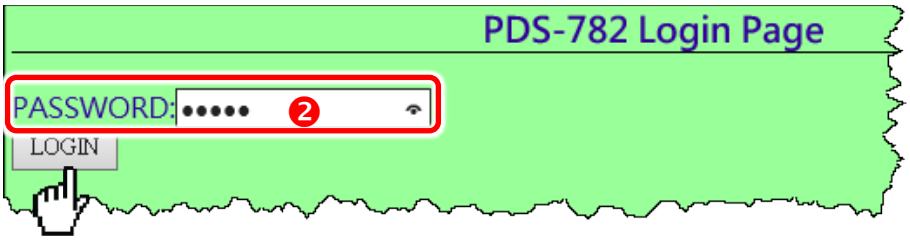

Step 3: Set the new "**Web Read Only**" **properly = 0** and click the "**UPDATE**" button to update the settings.

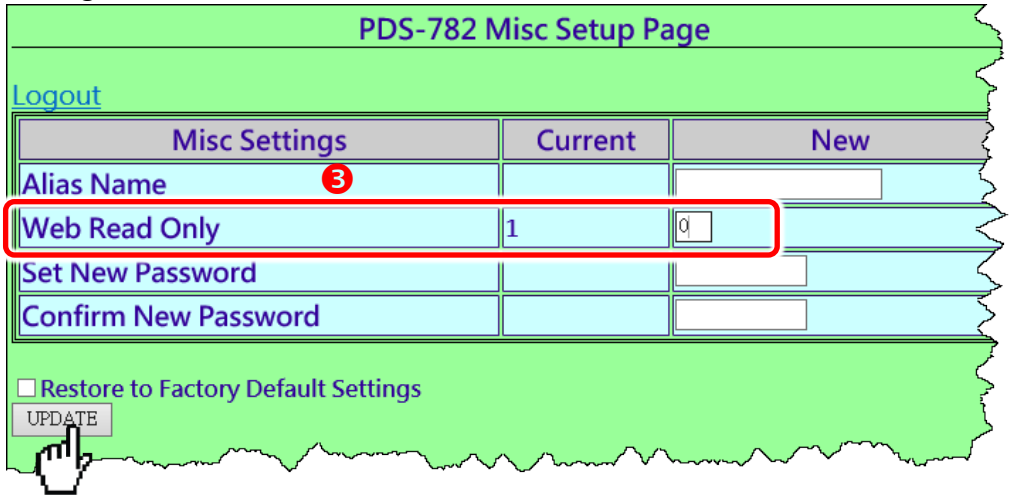

Step 4: Check that the current the "**Web Read Only**" = 0.

Step 5: Click "**Logout**" to complete the operation.

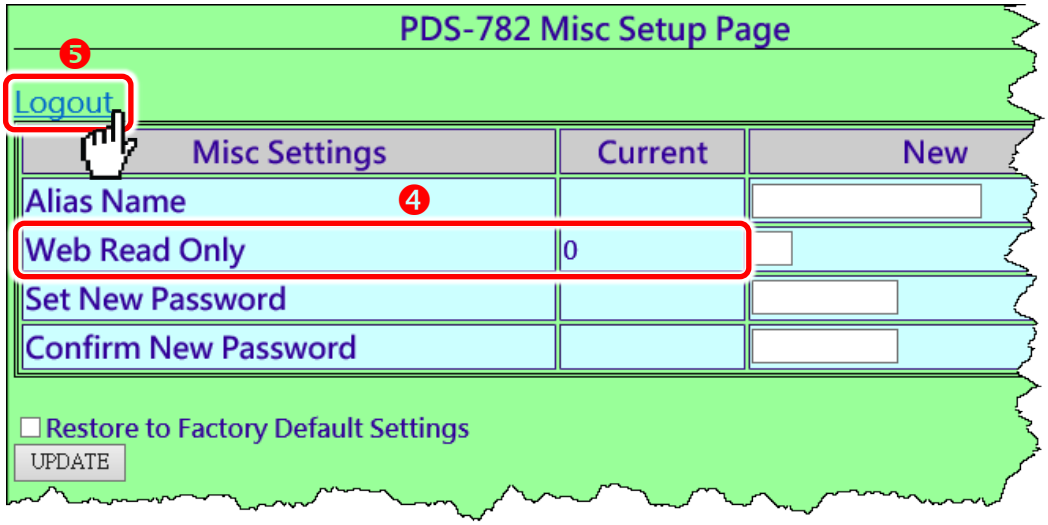

4.5.2 Change Password

To change a password of the Login Page, follow the procedure described below:

Step 1: Click the "**Login**" tab at the PDS Misc Setup Page to proceed to the Login Page.
Step 2: Enter the password in the **"PASSWORD:"** field (use the default password **"admin"**) and click the "**LOGIN**" button to proceed to the settings page.

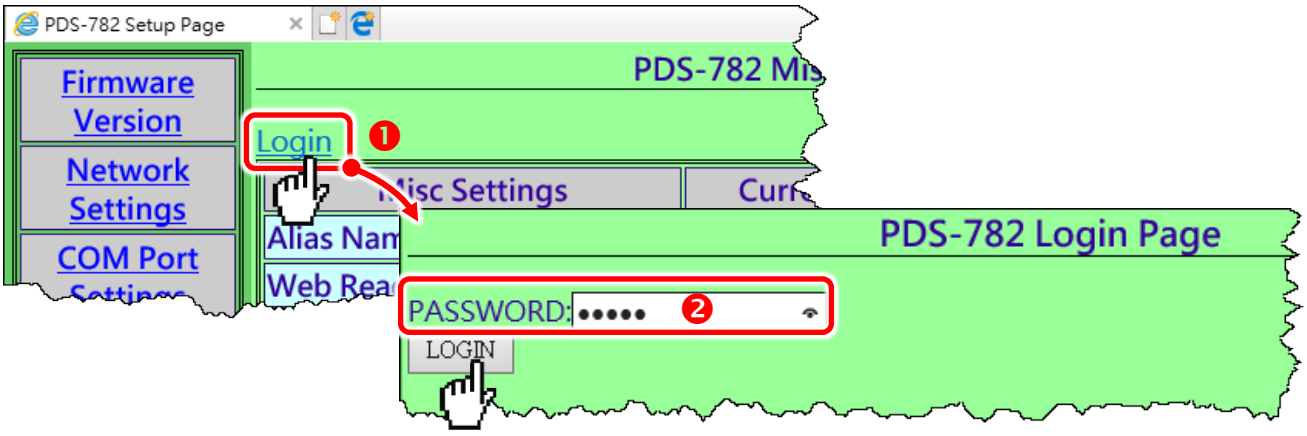

Step 3: Enter the new password in the **"Set New Password"** field. Re-enter the new password in the **"Confirm new password"** field.
Step 4: Click the **"UPDATE"** button to update the password, and then click the "**Logout**" to complete the operation.

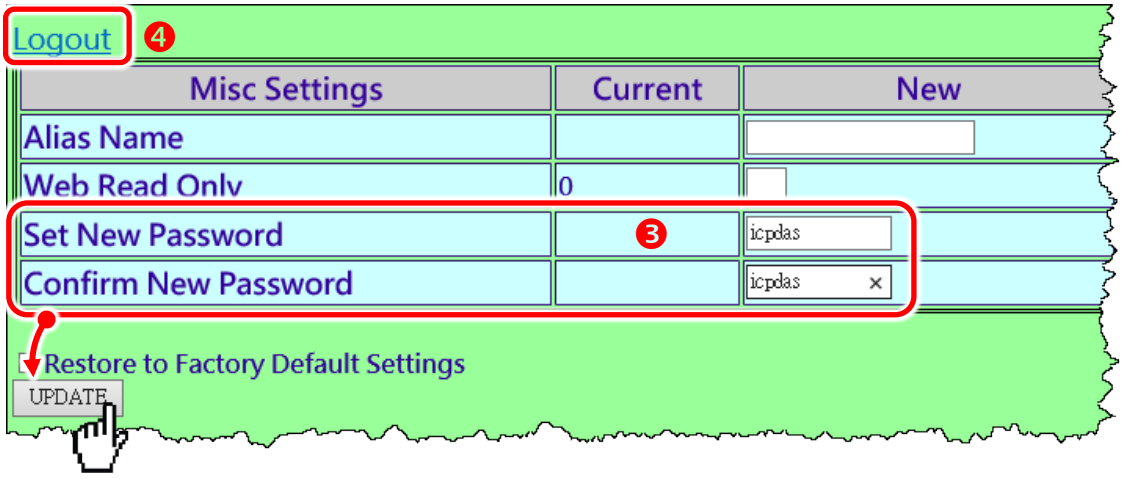

4.5.3 Restore to Factory Default Settings

Use the following procedure to reset all parameters to their original factory default settings:

Step 1: Click the "**Login**" tab at the PDS Misc Setup Page to proceed to the Login Page.
Step 2: Enter the password in the **"PASSWORD:"** field (use the default password **"admin"**) and click the "**LOGIN**" button to proceed to the settings page. If you want to change default password, please refer to Section 4.5.2 "Change Password".

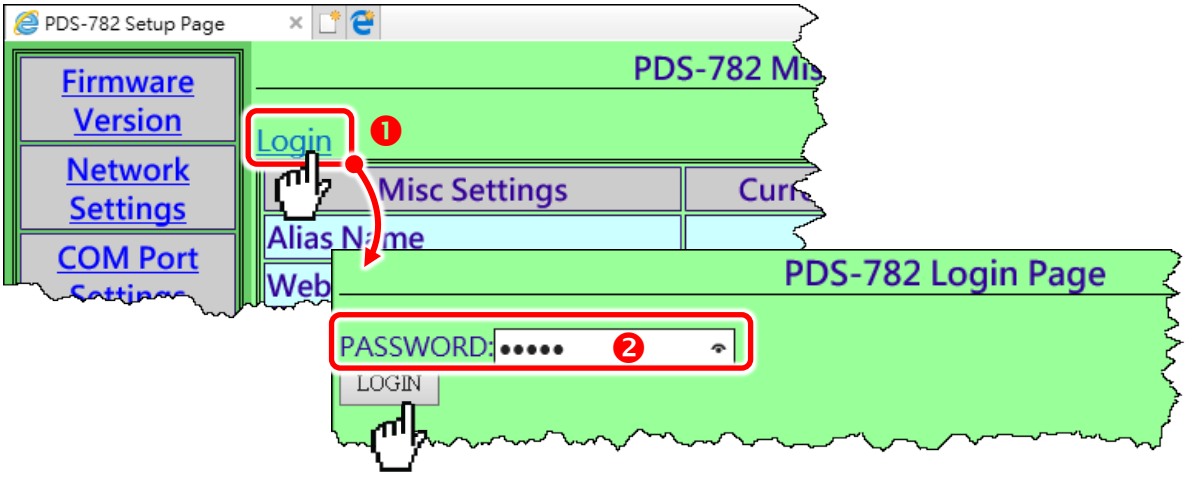

Step 3: Check the **"Restore to Factory Default Settings"** option and click the **"UPDATE"** button to update the setting.
Step 4: Click the "**Logout**" to complete the operation and **power-on reboot** the PDS series.

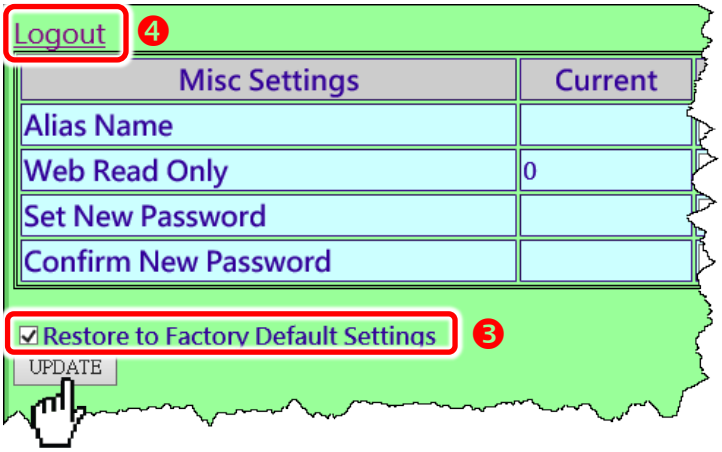

PDS Factory Default Settings	
Network Settings	
IP Address	192.168.255.1
Gateway Address	192.168.0.1
Subnet Mask	255.255.0.0
DHCP	Disabled
Basic Settings	
Alias	N/A

Note:
User can restore PDS password to default value "admin" by using "config=RESET" console command (refer to Chapter 9 Console/Telnet Commands List). This command sets most configurations of PDS to factory setting. It requires rebooting the PDS for loading new configuration (includes default password).

5. Typical Applications

5.1 Virtual COM Application

The PDS series is designed to link RS-232/422/485 devices to an Ethernet network. The VxComm utility allows the built-in PDS series COM Port to be virtualized to a standard COM Port of a host PC, as shown below:

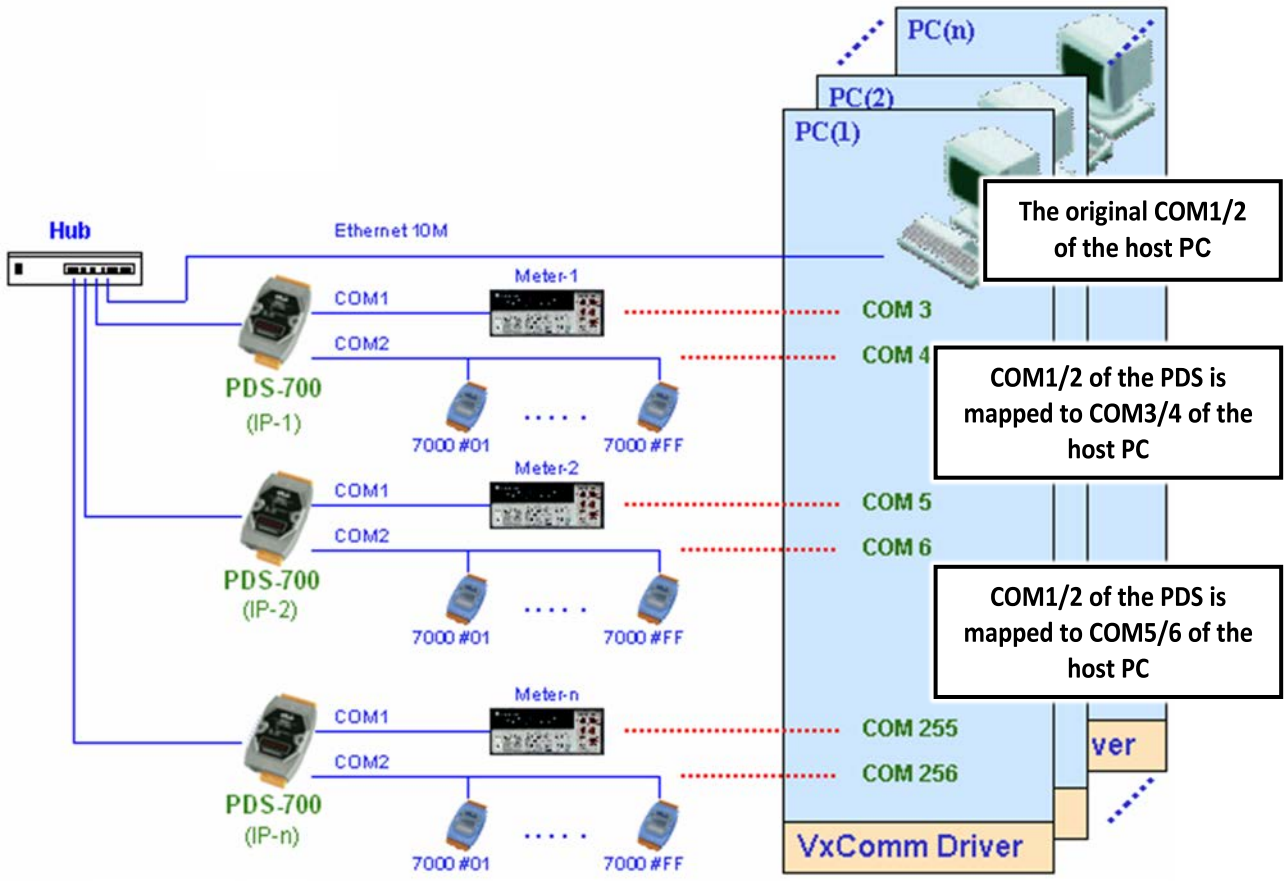

In the configuration above, Meter-1 is virtualized to link to COM3 of the host PC. Therefore, a program originally designed for the MS-COMM standard can access the meter without the need for any modification.

5.2 Ethernet I/O Applications

The PDS series provides 2 types of Ethernet I/O solutions:

- Linking to I-7000 series modules
- Built-in DIO (if the module supports the DIO function)

Linking to I-7000 series modules

The I-7000 series provides a variety of I/O operations, such as D/I, D/O, A/D, D/A, Counter and Frequency Measurement, etc. The I-7000 series was originally designed to be used with RS-485 networks, so COM2 on the PDS-700 can be used to link to I-7000 series modules.

By using VxComm technology, programs that on the host PC support serial devices can be upgraded from a RS-485 network to an Ethernet network without requiring any modifications to the program. Refer to section 5.1 "Virtual COM Application" for more information.

Built-in DIO

The DCON protocol is a request /reply communication. Protocol that is defined using a simple ASCII format, such as $AAN, $AASi6, #AAN, etc. and is used to access PDS and I-7000/8000/ 87k series I/O modules.

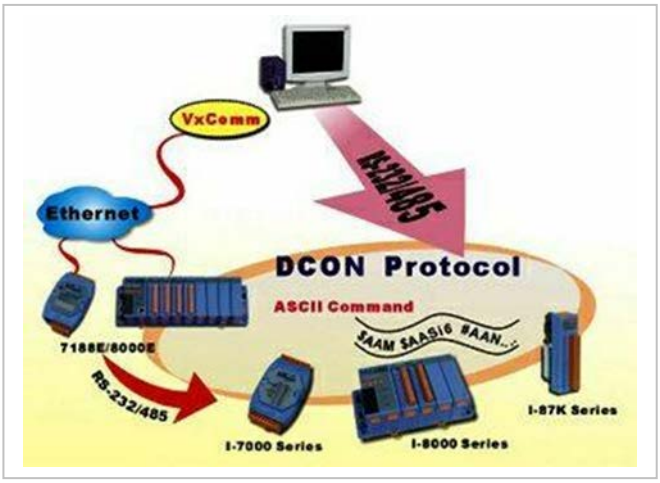

The DCON protocol command set for the PDS is introduced in Chapter 7 "Virtual I/O". The protocol allows access the built-in I/O through the virtual COM Ports mapped to the Port I/O of the PDS in the VxComm Utility.

5.3 Linking I-7000 to an Ethernet Network

The I-7000 family was originally designed for use with an RS-485 network. They are very robust and work well under the harsh industrial environments.

The PDS enables I-7000 modules to be upgraded to an Ethernet solution. Linking I-7000 modules to an Ethernet combines the advantages of both RS-485 and Ethernet solutions and expands RS-485 applications to the whole world.

The VxComm approach provides an MS-COMM-compatible interface. Therefore, previously developed programs should still function without the need for any modifications.

5.4 Configurable Ethernet Data Logger

Using the VxComm driver, PDS + 7000 modules can be virtualized to become COM Port + 7000 modules located on the host-PC, and then the Data Logger in the DCON Utility can be used to access data of I-7000 from the Ethernet. Signal data originating from the I-7000 modules can be analyzed using MS-Excel without the need to write any custom programs

1: The DCON utility includes a log function, as show below:

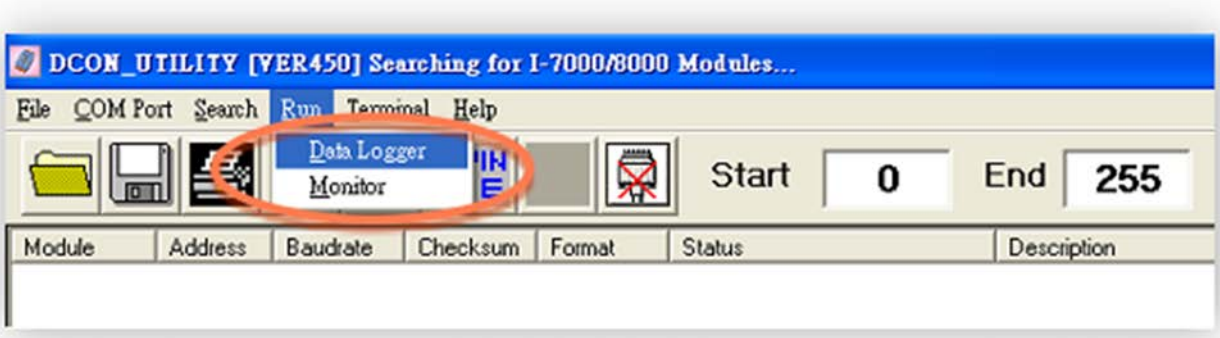

2: Configure the system connection as shown below and click the **"Start"** button to begin logging data.

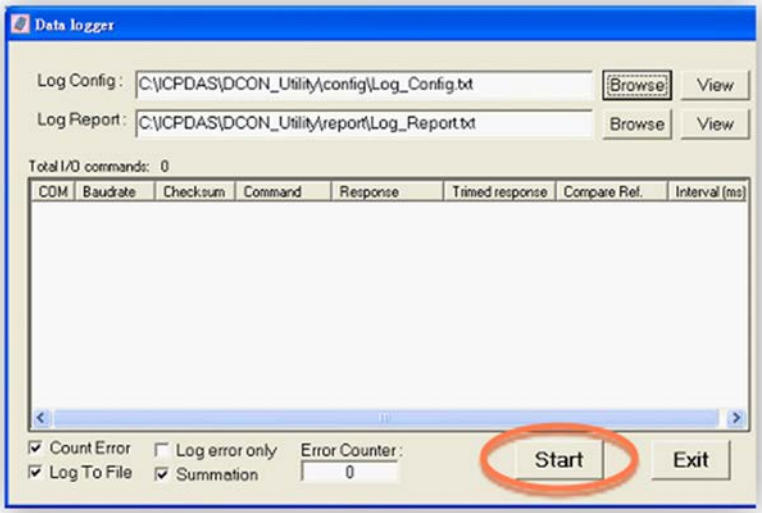

3: Open the log file in MS Excel to view the log data as shown in the example below:

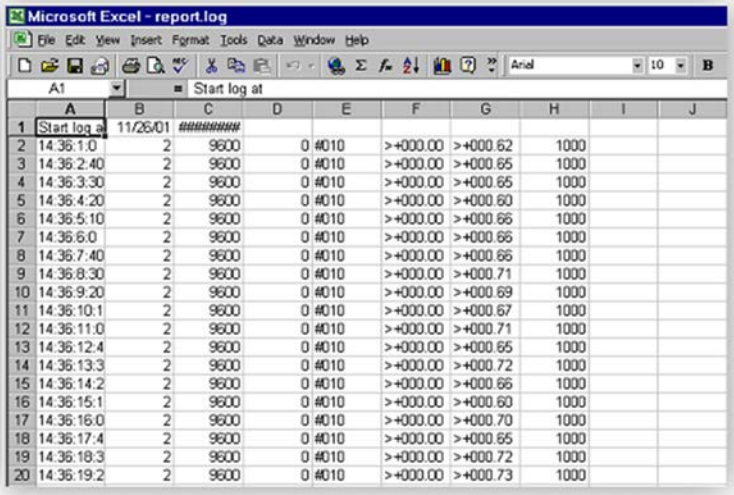

By using the I-7000 DCON utility and MS Excel in conjunction with **VxComm technology**, the signal data originating from I-7000 modules via the Ethernet network can be analyzed without the need to write custom programs. For more information about the **log function**, refer to the online help feature (English and Traditional Chinese) of the DCON utility.

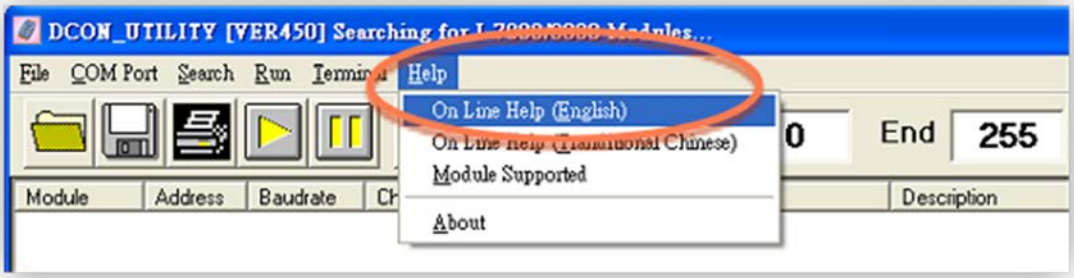

5.5 Pair-connection Applications

PDS series can be used to create a pair-connection application (as well as serial-bridge or serial-tunnel), and then route data between two serial devices via TCP/IP, which is useful when connecting mainframe computers, servers or other serial devices that do not themselves have Ethernet capability.

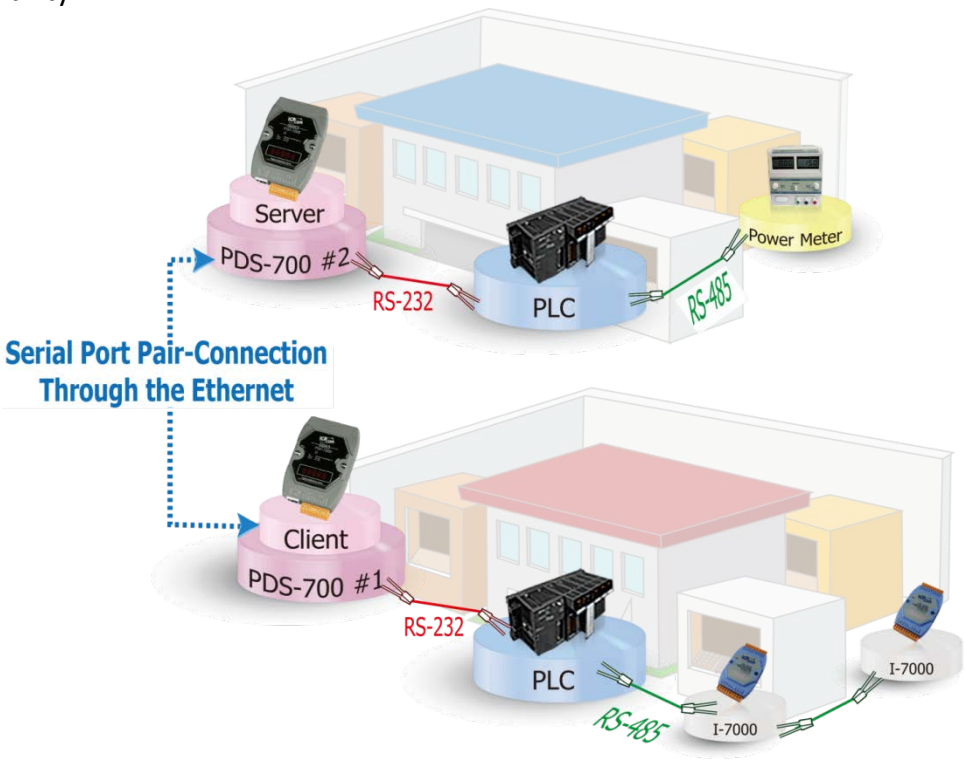

The following are examples of pair-connection tests:

Pair-connection Settings:

Model		Port Settings (default)			Pair-connection Settings	
		COM Port	Baud Rate	Data Format	Remote Server IP	Remote TCP Port (default)
Client Mode	**PDS-700 #1** (e.g. DS-712)	COM1	9600	8N1	IP Address of PDS-700 #2	10001
Server Mode	**PDS-700 #2** (e.g. PDS-782)	COM1	9600	8N1	-	-

Note:
The Baud Rate and Data Format settings of the client and server (PDS-700 #1 and #2) depend on the COM ports of the PC (or the connected device).

Follow the procedure described below:

➢ Step 1: Connecting to a network, PC and Power

1. Confirm that the PDS series are functioning correctly. Refer to Chapter 3 "Setting up the PDS Series Module" for more details.
2. Connect COM1 of the PC to COM1 of the PDS-700 #1, and then connect COM2 of the PC to COM1 of the PDS-700 #2. For detailed RS-232 wiring information, refer to Section 2.5 "Wiring Notes".
3. Supply power to the PDS series.
   - Supply **24 V_{DC} (+10 ~ +30 V_{DC}) power** to the PDS(M)-700 Series.
   - Supply **24 V_{DC} (+12 ~ +48 V_{DC}) power** to the PPDS(M)-700-MTCP, DS-700, PPDS-700-IP67, PDS-782-25 and PDS-5105D-MTCP Series.

The image below shows an example of the setup for a pair-connection test:

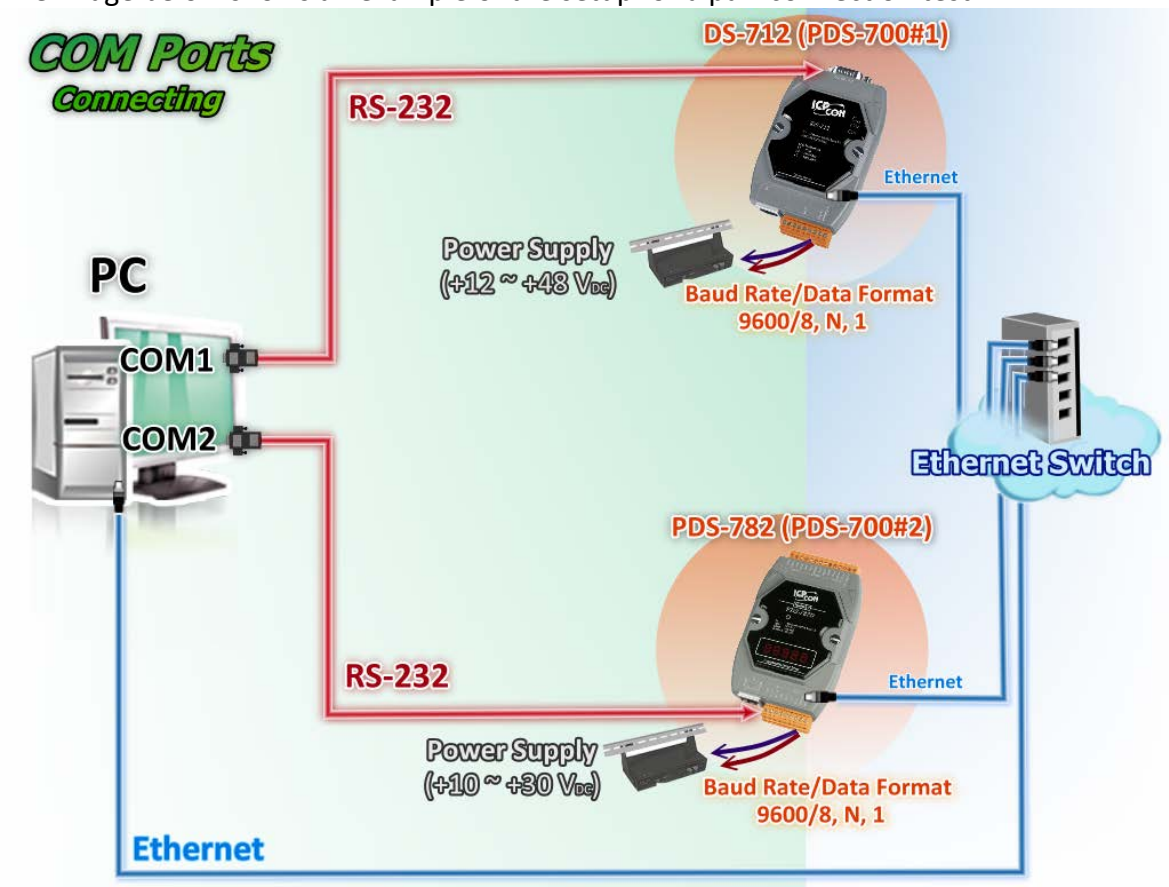

Figure 5.5-1

➢ Step 2: Configuring the Ethernet Settings

Contact your Network Administrator to obtain the correct and functioning network configuration for the PDS series (including the **IP Address, Mask and Gateway details)**. Also refer to Chapter 3 "Setting up the PDS Series Module" for more details.

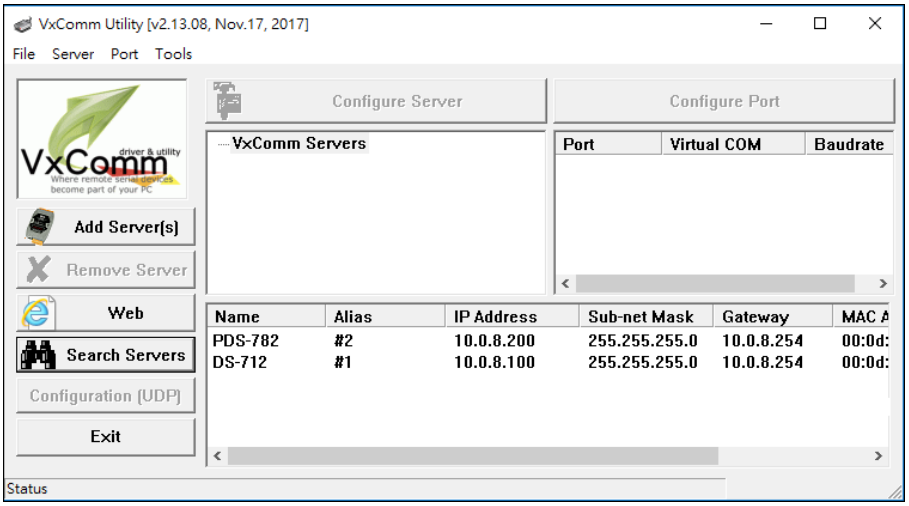

Figure 5.5-2

➢ Step 3: Configuring DS-712 (PDS-700 #1) in Client Mode

1. Enter the URL address of the PDS-700 #1 in the address bar of the browser or click the **"Web"** button in the VxComm Utility to log in to the web configuration page.

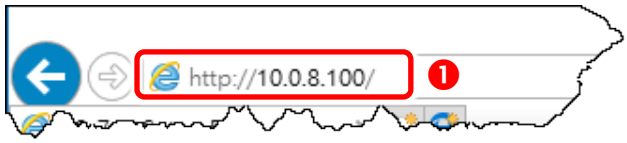

2. Check **firmware version is v3.2.32[Feb 25 2014] or later** of the PDS-700 #1.

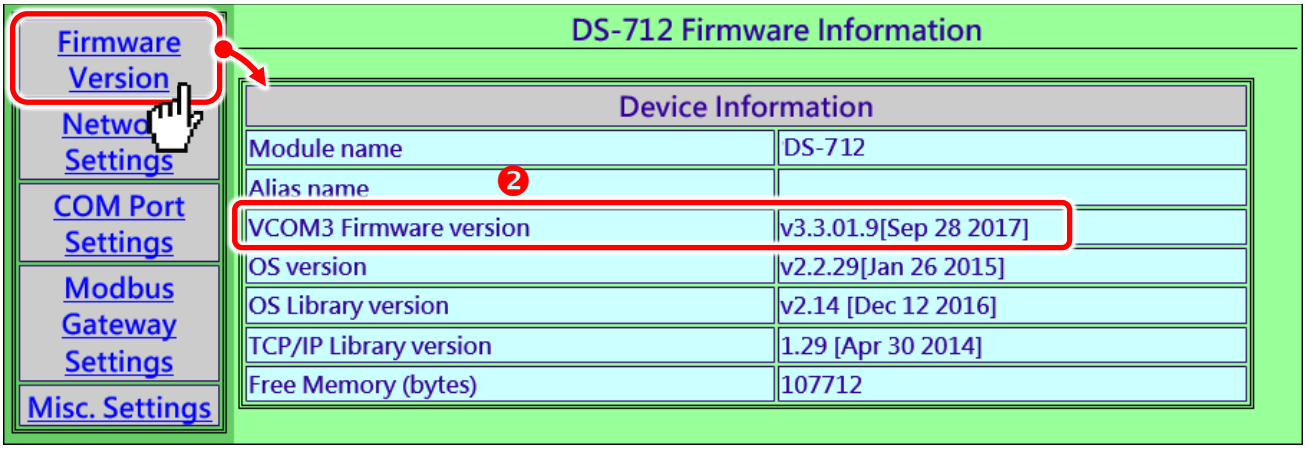

Figure 5.5-3

3. Click the "**COM Port Settings**" tag to enter the settings page, and select the appropriate **COM Port number, Baud Rate and Data Format** settings from the relevant drop down options depending on the model and type of module being used as the Modbus slave device, for example **"9600"**, "**8", "None"** and **1**" .
4. Check the "**Save current settings to EEPROM**" and "**Apply Current settings**" options, and then click the "**SET COM PORT**" button to finish configuration.
5. Click "**Set Remote VCOM3 connection**" to precede to the PDS-700#1 Remote Vcom3 connection Setup Page (Pair-connection settings).

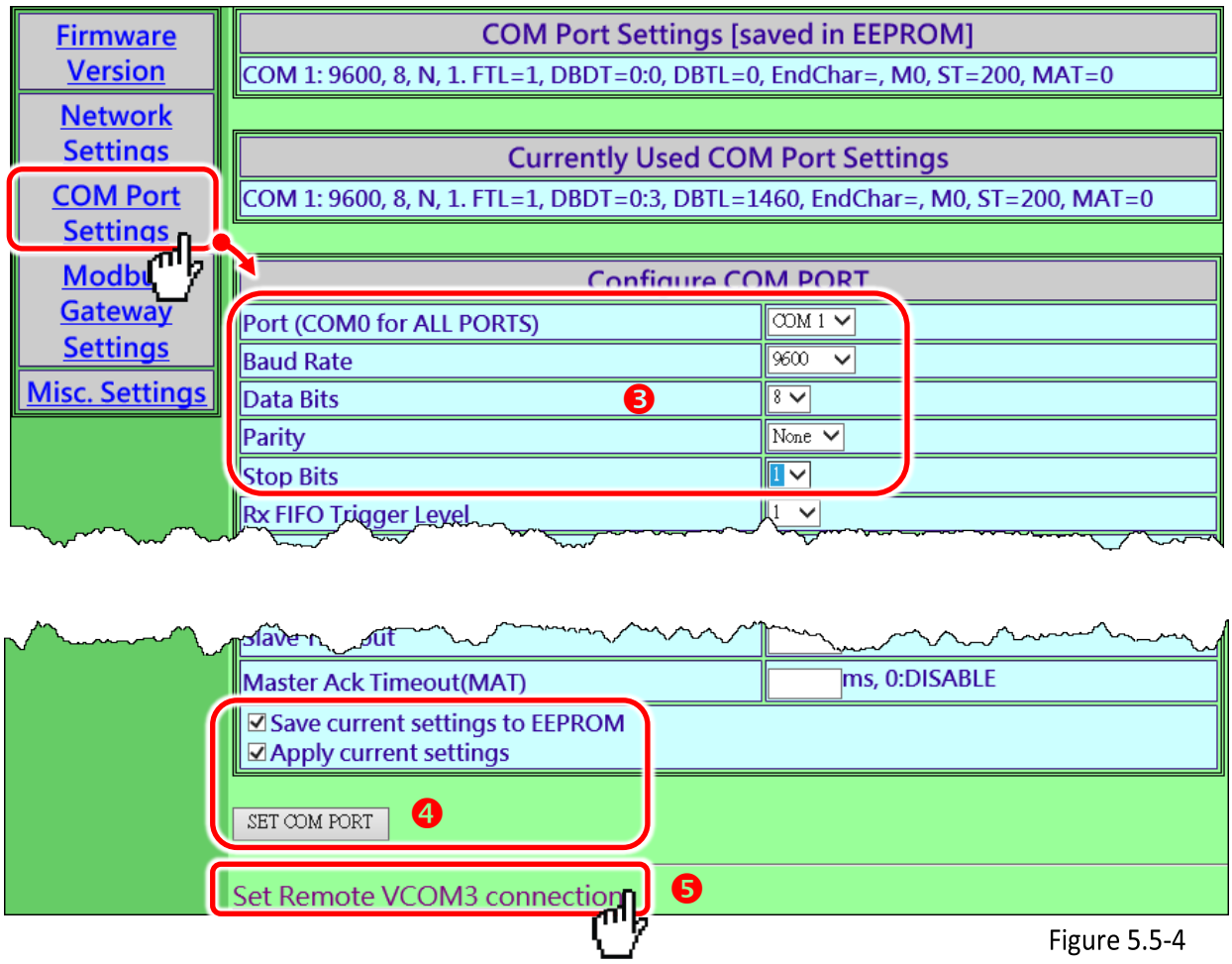

Figure 5.5-4

6. Select "**Add COM**" and type in the COM port of the PDS-700 #1 (Client) which you want to use. Type the appropriate **COM Port number, IP address and command port of the PDS-700 #2 (Server)** settings in the relevant fields, for example **"COM: 1"**, **"IP: 10.0.8.200" and "cmd port: 10000"**.

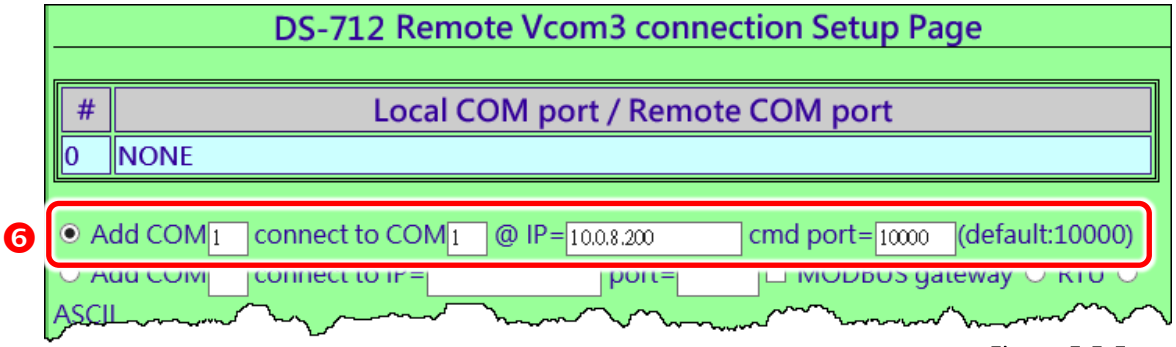

Figure 5.5-5

※ If the remote device isn't our product and doesn't support command port 10000, refer to the following to configure pair-connection function.

6. Select "**Add COM**" and type in the COM port of the PDS-700 #1 (Client) which you want to use. Type the appropriate **IP address and TCP Port of the PDS-700 #2 (Server)** settings in the relevant fields, for example **"IP: 10.0.8.200" and "port: 10001"**.

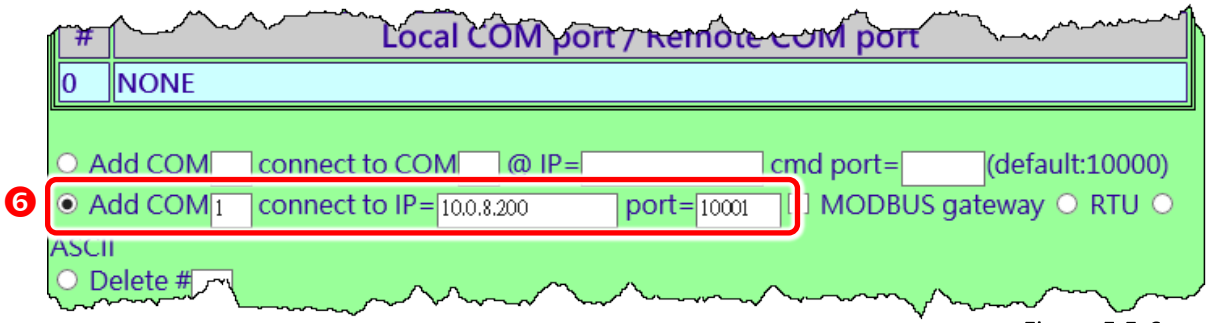

Figure 5.5-6

7. Check the "**Save to EEPROM**" option and click "**submit**" button to update configuration.

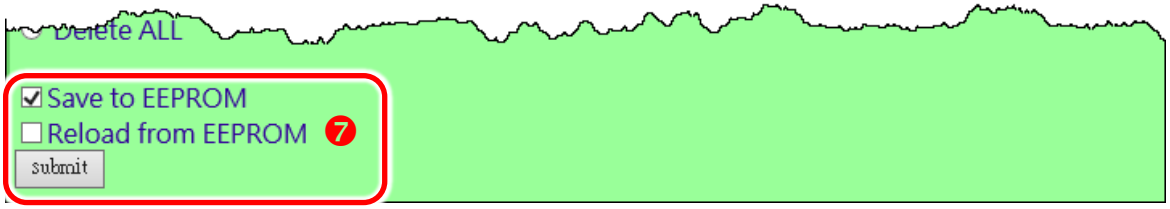

Figure 5.5-7

8. Check the **Local COM Port/Remote COM port** area for pair-connection setting.

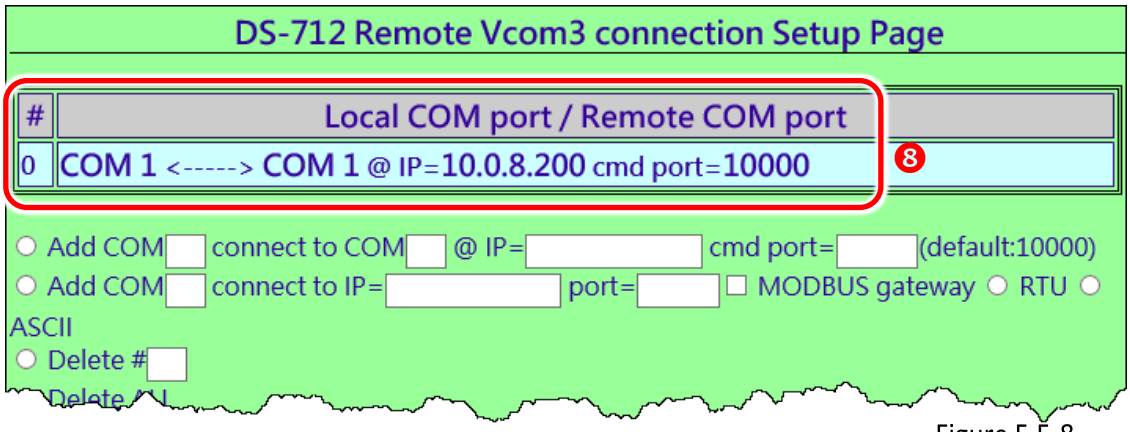

Figure 5.5-8

9. **Reboot PDS-700 #1(Client)** and then setting is complete.

➢ Step 4: Configuring the PDS-782 (PDS-700 #2) in Server Mode

1. Enter the URL address of the PDS-700 #2 in the address bar of the browser or click the **"Web"** button in the VxComm Utility to log in to the web configuration page.

2. Click the "**COM Port Settings**" tag to enter the settings page, and select the appropriate **COM Port number, Baud Rate and Data Format** settings from the relevant drop down options depending on the model and type of module being used as the Modbus slave device, for example **"9600"**, "**8", "None"** and **1**" .

3. Check the "**Save current settings to EEPROM**" and "**Apply Current settings**" items, and then click the "**SET COM PORT**" button to finish configuration.

4. Click **"Set Remote VCOM3 connection"** at the PDS-700 #2 (Server) COM PORT setup page.

Refer to Figure 5-5.4 for illustrations of how to perform the Steps 2 to 4.

5. Confirm that the **Local COM port/Remote COM port area** of the **PDS-700#2 (Server) is "None"**.

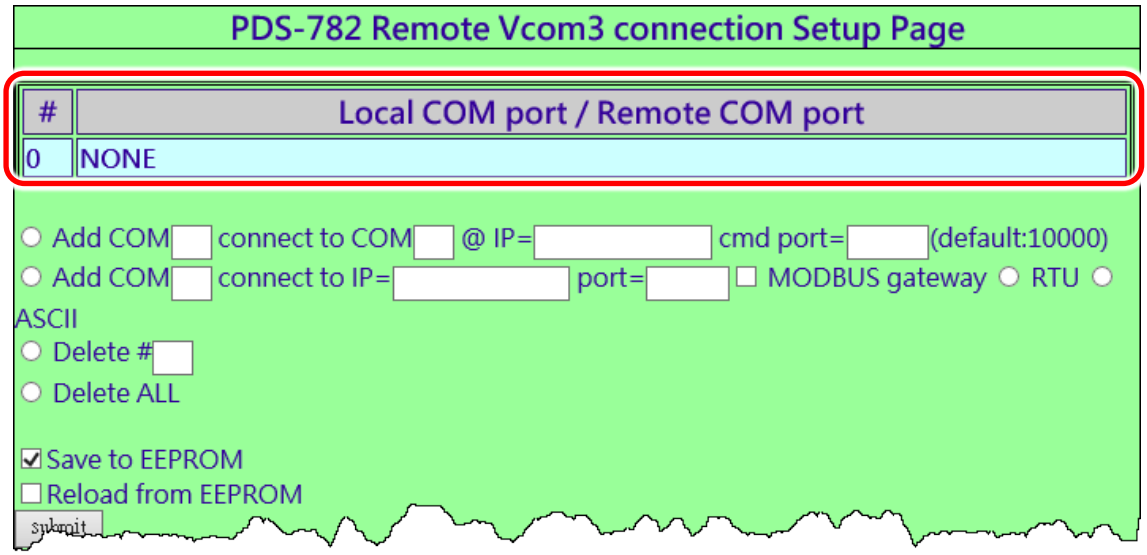

Figure 5.5-9

➢ Step 5: Testing the Pair-connection Functions

1. Download the Test2COM.exe, you can get it from the following ICP DAS web:
   http://ftp.icpdas.com/pub/cd/iocard/pci/napdos/multiport/utility/



2. Execute the Test2COM.exe program.

Note:
The Baud Rate and data format depend on the serial port settings for the web configuration of the PDS-700 #1 and PDS-700 #2.

Please refer to Figure 5.5-10 for details settings.

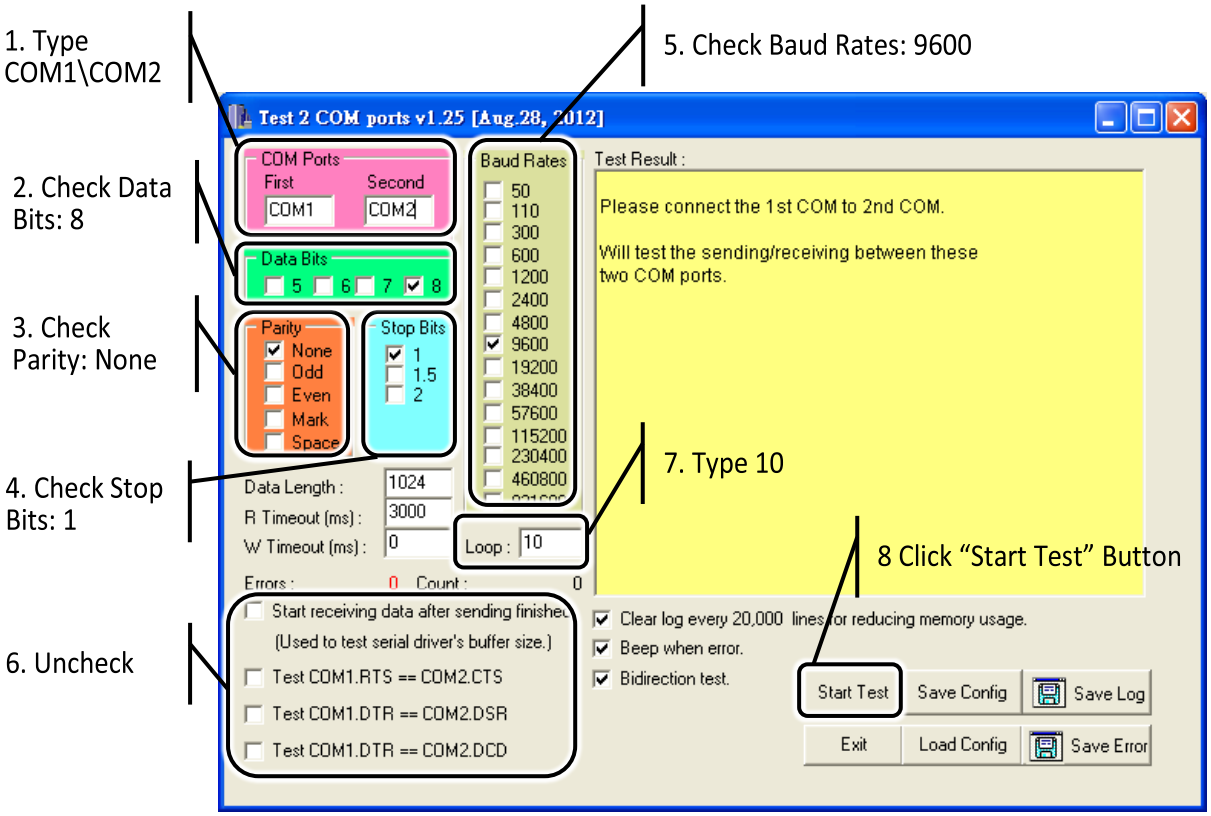

Figure 5.5-10

3. Get the test result.

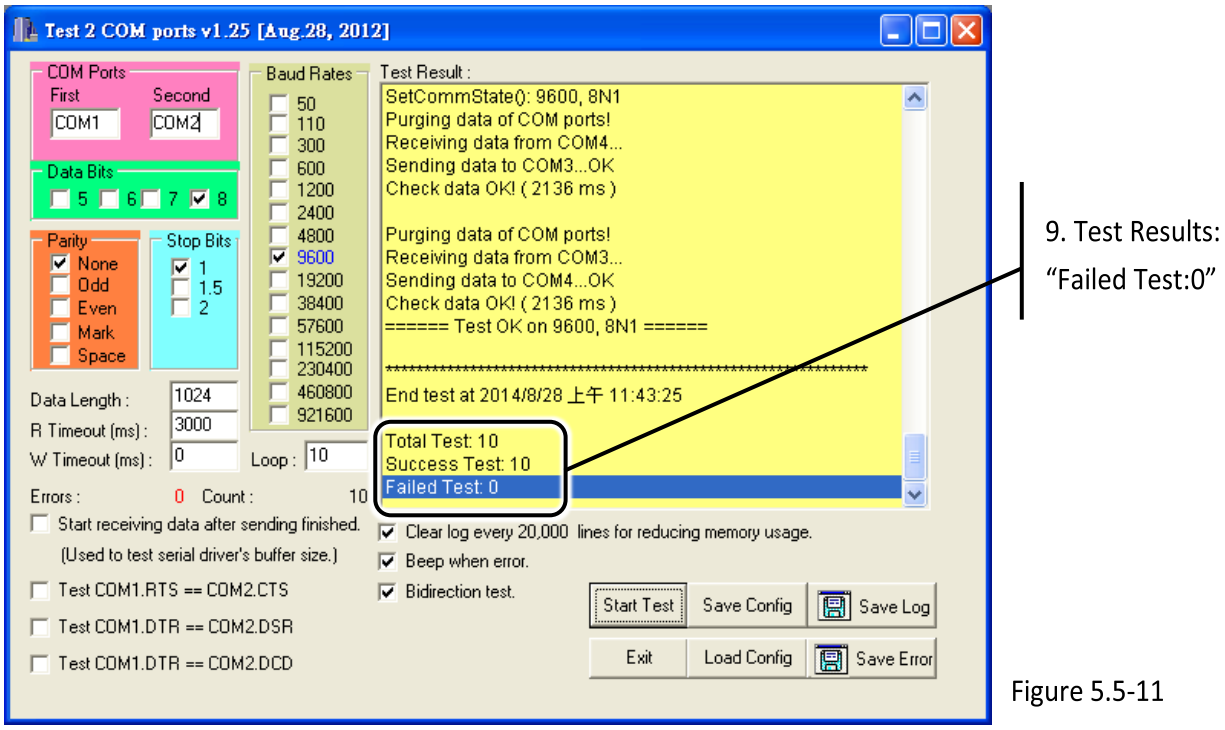

Figure 5.5-11

6. Modbus Testing and Protocol

The PDS series module can works as a Modbus TCP to RTU/ASCII gateway that supports most SCADA/HMI communications based on the Modbus/TCP protocol. This chapter provides detailed information about the Self-Test process, which is used to confirm that the PDS series is operating correctly. **Note: Starting from the firmware version v3.3.01.4 [Apr. 12 2016], the DS-700 and PDS(M)-700(D) series modules support Modbus Gateway function.**

Here, the M-7022 module is used as an example. For other Modbus RTU device or third party Modbus RTU device, refer to the specific Quick Start Guide or User Manual for that Modbus RTU device. Follow the procedure described below:

➢ Step 1: Connect the Modbus device to the PDS series.

1. Keep up network connection and power on status for your PDS series. Refer to Chapter 3 "Setting up the PDS Series Module" for more details.
2. Connect the Modbus device (e.g. M-7022, optional) to the PDS series on COM2 (RS-485 bus) for self-test. Refer to Section 2.5 "Wiring Notes" for more details.
3. Supply power to the Modbus device (M-7022, Device ID: 2, +10 to +30 V_{DC} Power used).

Refer to Figure 6-1 to 6-2 for an illustration of how to perform the above steps.

➢ **Figure 6-1: DS-700/PDS(M)-700(D)/PPDS(M)-700(D)-MTCP/PDS-5105D-MTCP series.**

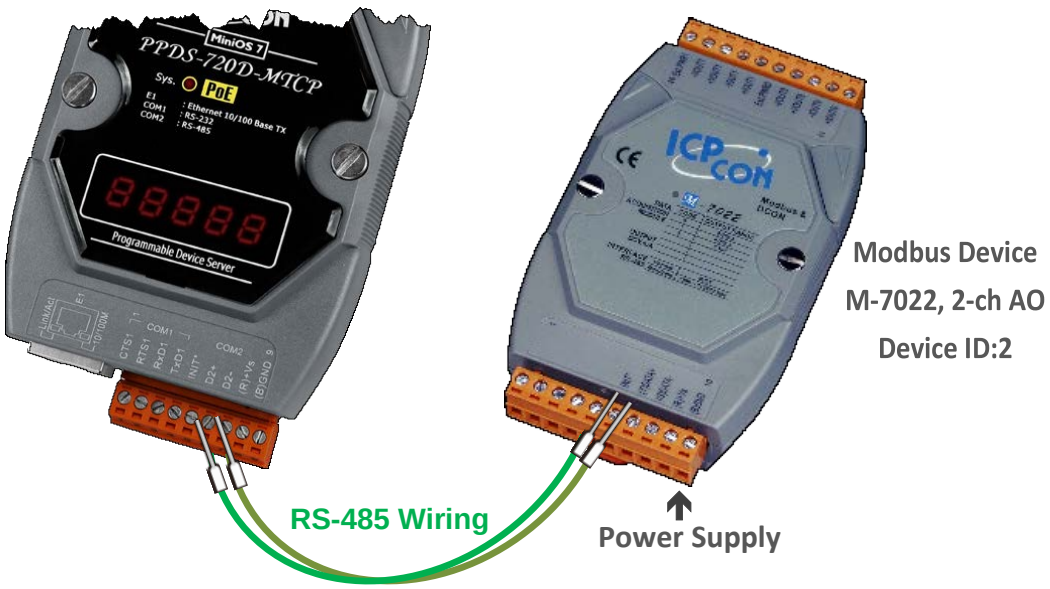

➢ **Figure 6-2: PPDS-700-IP67 series**

f

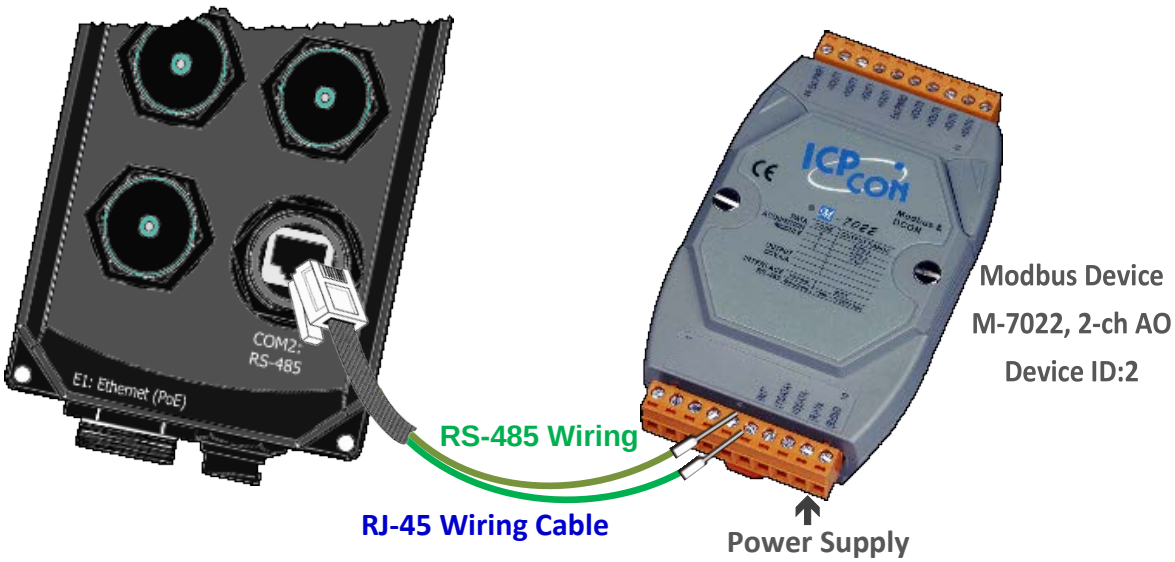

Note:
Please refer to the pin definitions of PPDS-700-IP67 (see Section 2.4.15) to make RJ-45 wiring and power cables.

6.1 Modbus/TCP to Modbus/RTU Gateway

➢ Step 1: Configuring Baud Rate and Data Format

1. Enter the URL address of the PDS series in the address bar of the browser to log in to the web configuration pages.

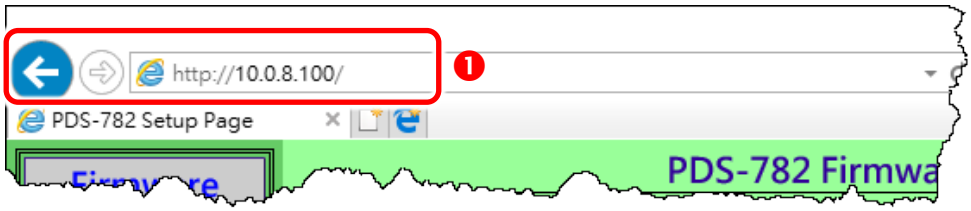

Figure 6.1-1

2. Click the **"COM Port Settings"** in the web page to configure the COM ports.
3. Select the appropriate **COM Port, Baud Rate and Data Format** settings from the relevant drop down options depending on your Modbus device, for example **Port: COM2, Baud Rate: 19200, Data Bits: 8, Parity: None, Stop Bits: 2**.
4. Click the **"SET COM PORT"** button to update it to PDS series.

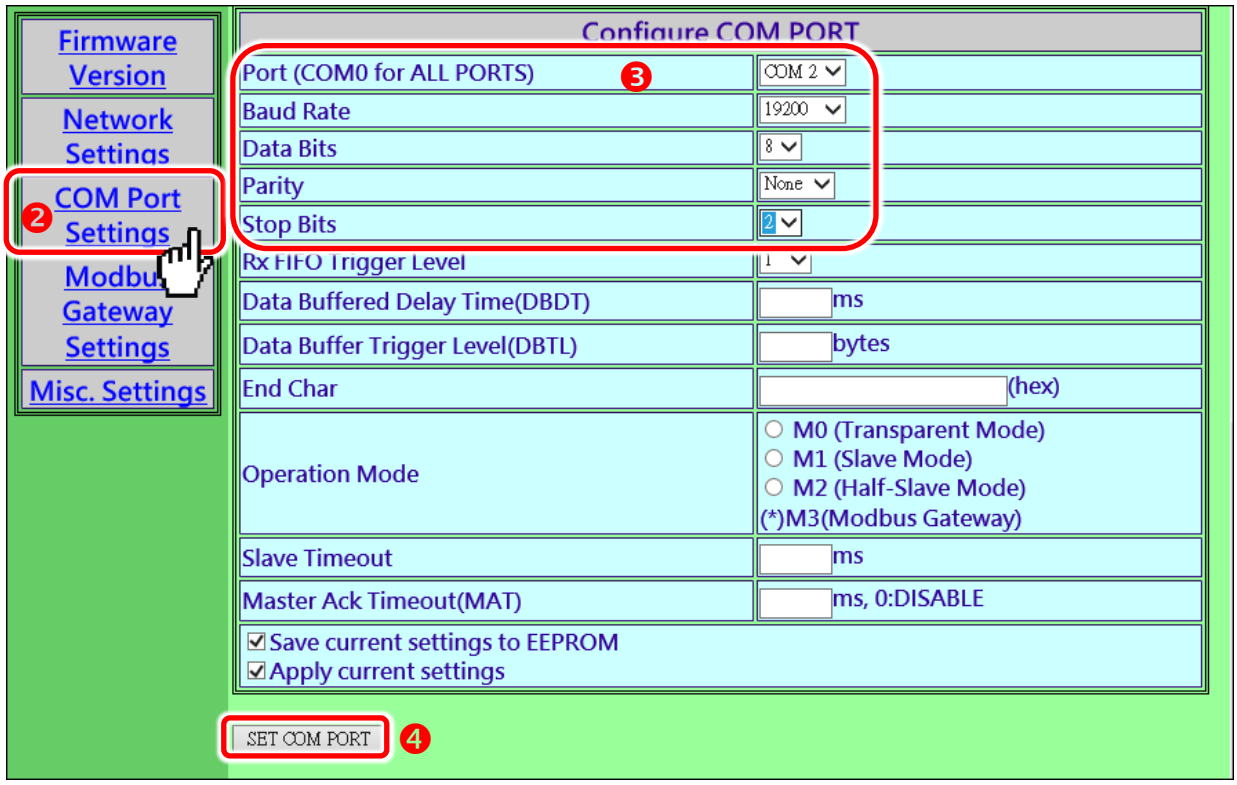

Figure 6.1-2

➢ Step 2: Configuring COM Ports for Modbus Gateway

1. Click the **"Modbus Gateway Settings"** in the web page to configure the COM ports.
2. Select appropriate **COM Port** from the **"Port (COM0 for ALL PORTS)"** drop down options, for example **"COM2"**.
3. Assign a **Numbers of Modbus device** in the **"Number of ID for serial Modbus device"** field, for example **"4"**.

4. Select **Modbus type** from the **"Type (0: ASCII, 1: RTU)"** field, for example **"1 (Modbus RTU)"**.
5. Checked the **"Save to EEPROM"** and **"Apply the current setting"** and then click the **"Update"** button to update it to PDS series.

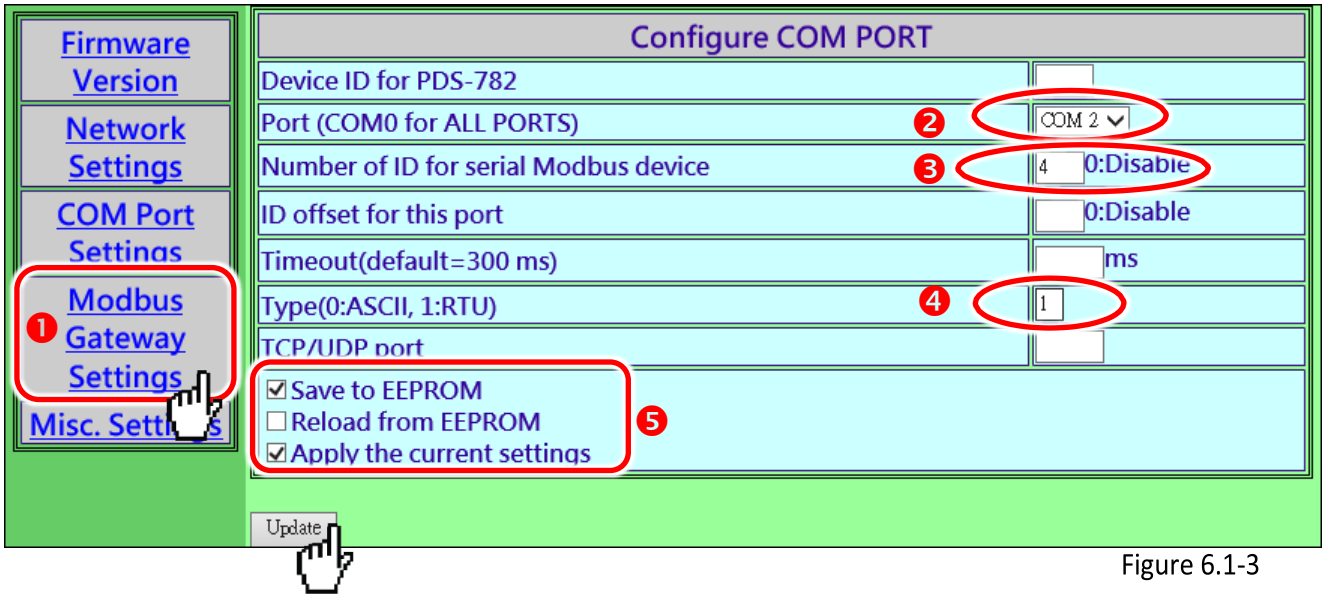

Figure 6.1-3

6. Check the COM Port for Modus gateway settings.

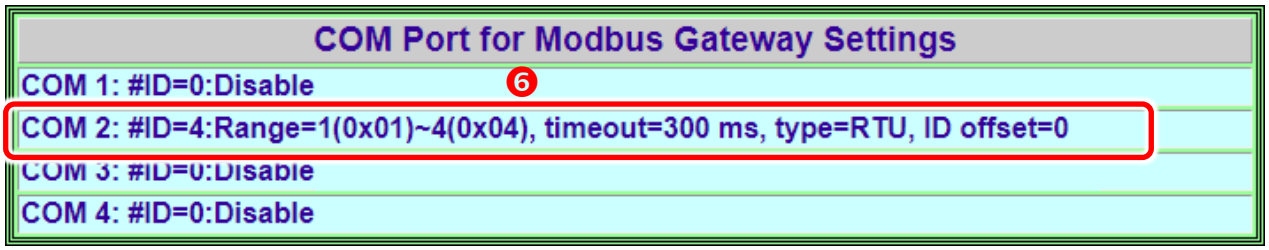

Figure 6.1-4

➢ Step 3: Test Modbus/TCP to Modbus/RTU Gateway

1. In the VxComm Utility, select the **"Modbus TCP Master"** item from the **"Tools"** menu to open the Modbus TCP Master Utility. **Note: This function is only supported by the VxComm driver version v2.12.15 [Dec. 13, 2014] or later.**

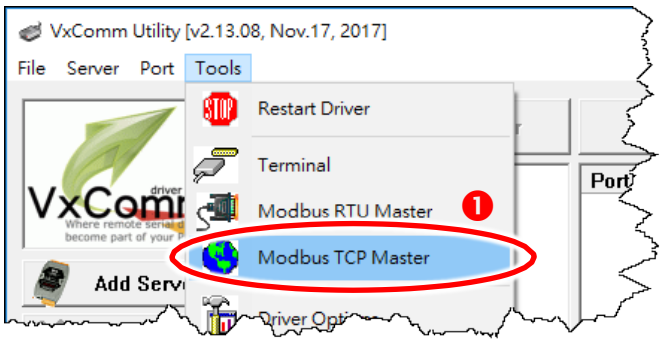

Figure 6.1-5

2. **Enter the IP address of PDS series** and click **"Connect"** button to connect the PDS series.
3. Refer to **"Protocol Description"** and **type Modbus command** in the command field.
   Note: The Modbus command settings depends on your Modbus device.
4. Click the **"Send Command"** button.
5. If the response data is correct, it means the test is success.

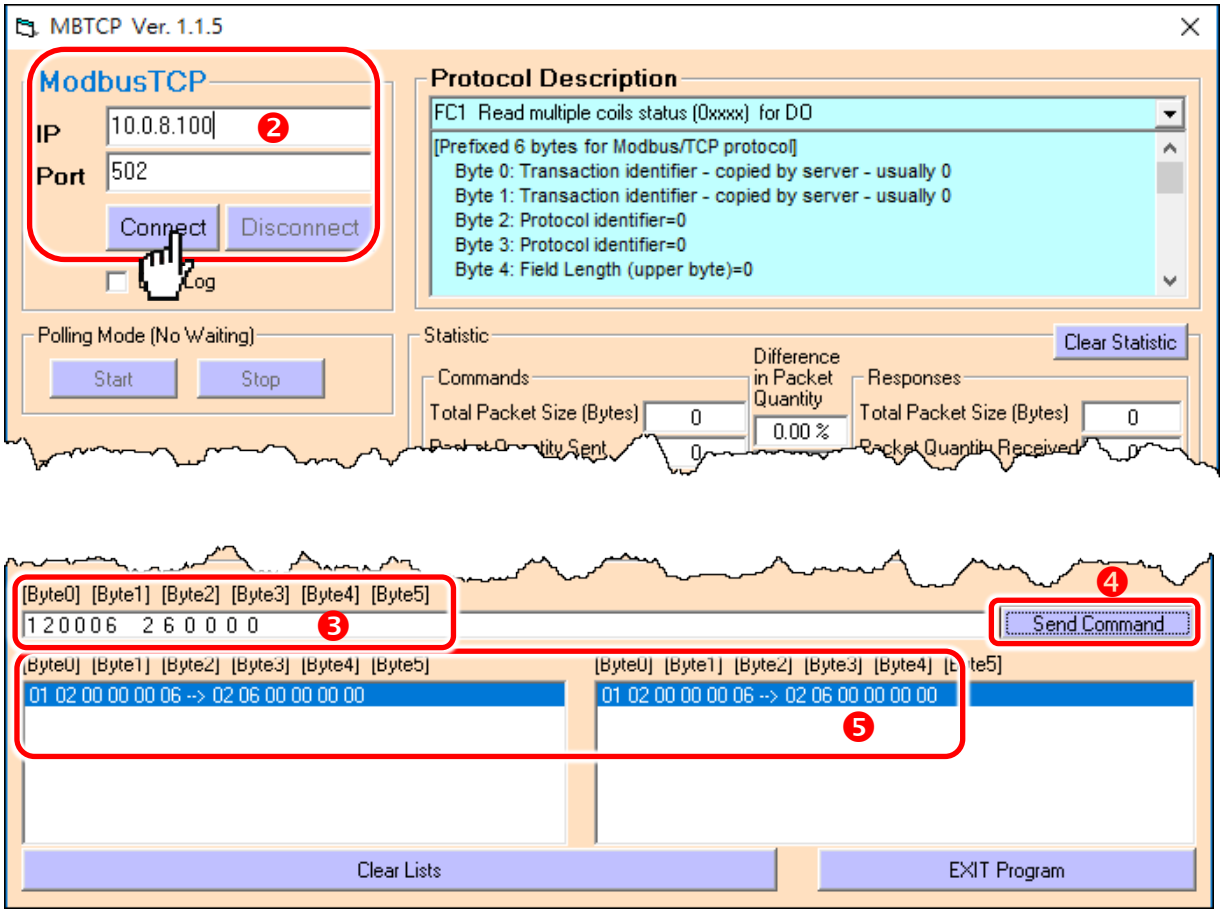

Figure 6.1-6

6.2 Access Modbus Device via Virtual COM Ports

If you want to use Modbus/RTU command to access the Modbus device through Virtual COM Ports, you can refer to below steps.

➢ Step 1: Configuring COM Ports for Virtual COM

1. Enter the URL address of the PDS series in the address bar of the browser to log in to the web configuration pages. (refer to Figure 6.1-1)
2. Click the **"COM Port Settings"** item to configure the COM ports, and then confirm that serial COM ports of PDS series are **not in the M3 mode (Modbus Gateway)**.

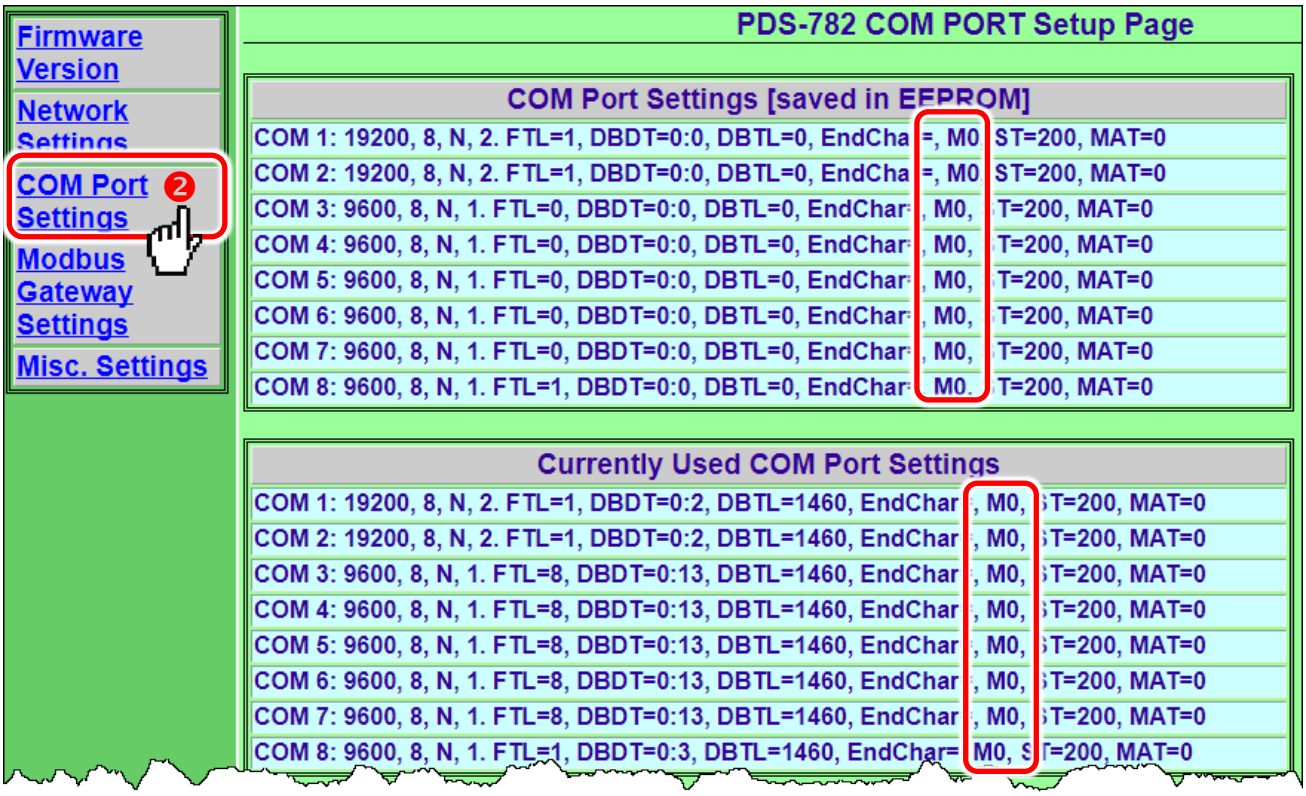

Figure 6.2-1

Note:
If the serial COM Port is M3 Mode (Modbus Gateway), refer to the Section 6.2.1 "How do I disable the M3 Mode (Modbus Gateway)" to disable it.

3. Select appropriate **COM Port** from the **"Port (COM0 for ALL PORTS)"** drop down options, for example **"COM2"**.
4. Select the appropriate **Baud Rate and Data Format** settings from the relevant drop down options depending on your Modbus device, for example **Baud Rate: 19200, Data Bits: 8, Parity: None, Stop Bits: 2**.
5. Select the **"M0, M1 or M2"** from the **"Operation Mode"** field, for example **"M0 (Transparent Mode)"**.
6. Check the **"Save current settings to EEPROM"**, **"Apply current settings"** and then click the **"SET COM PORT"** button to complete the setting.

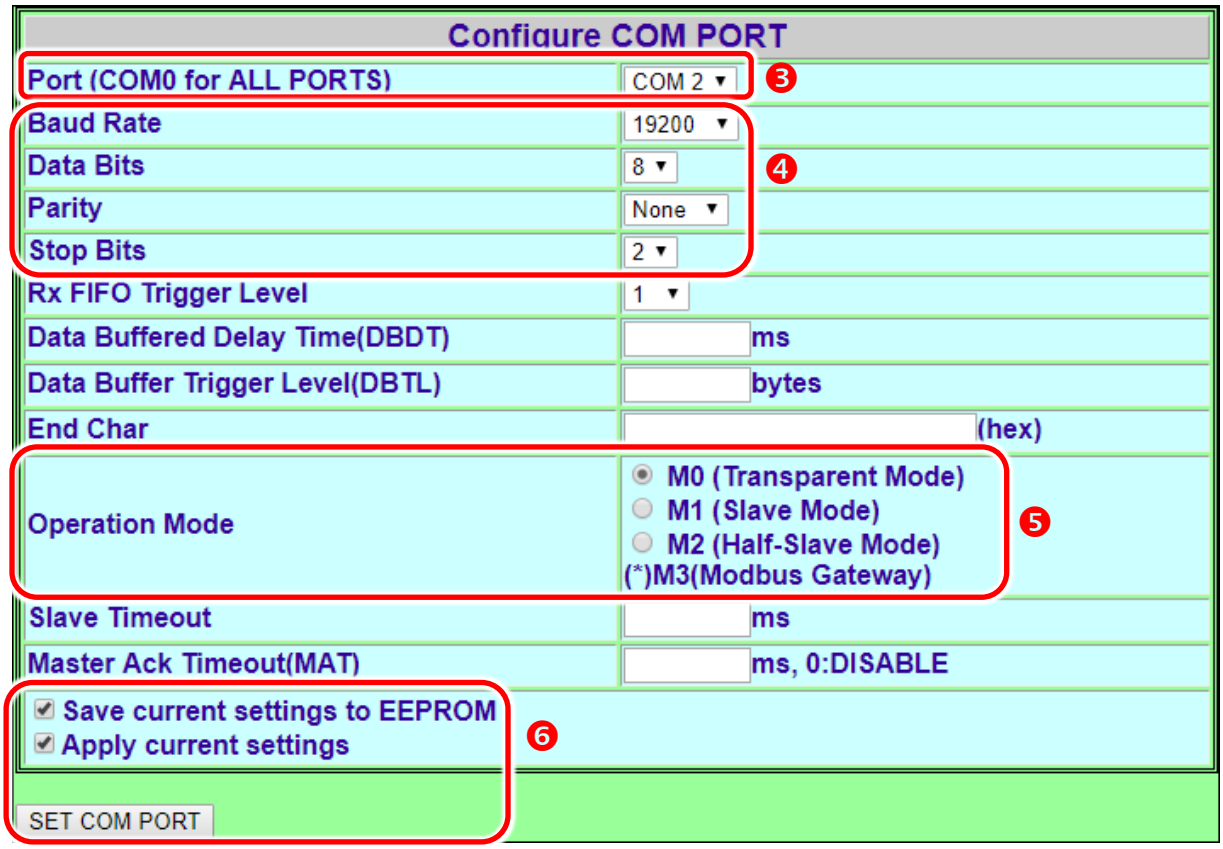

Figure 6.2-2

7. Run VxComm Utility program to the configuring the Virtual COM Ports of the PDS series, refer to Chapter 3 "Setting up the PDS Series Module" for detail information.

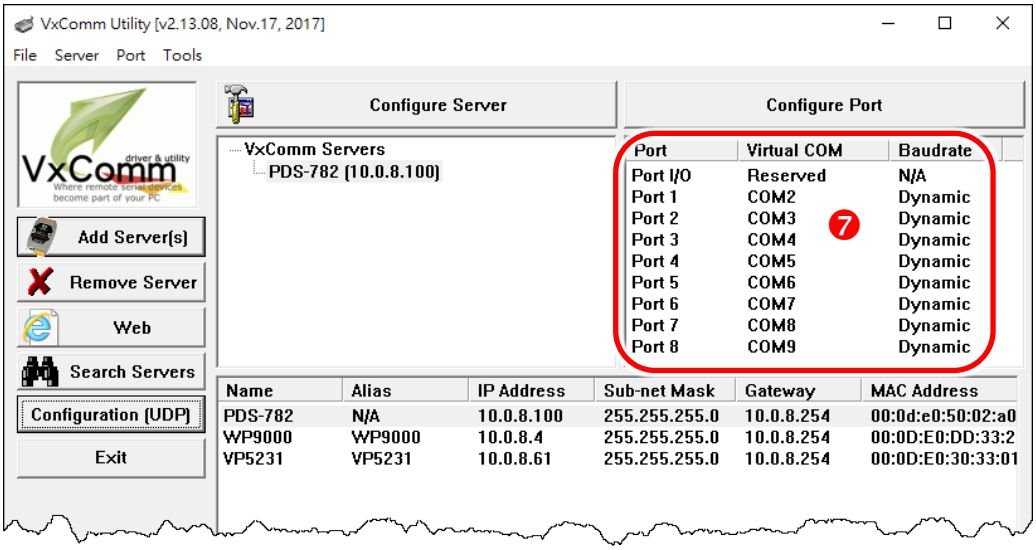

Figure 6.2-3

➢ Step 2: Testing Modbus Device through Virtual COM Ports

1. In the VxComm Utility, select the **"Modbus RTU Master"** item from the **"Tools"** menu to open the Modbus RTU Master Utility. **Note: This function is only supported by the VxComm driver version v2.12.15 [Dec. 13, 2014] or later.**

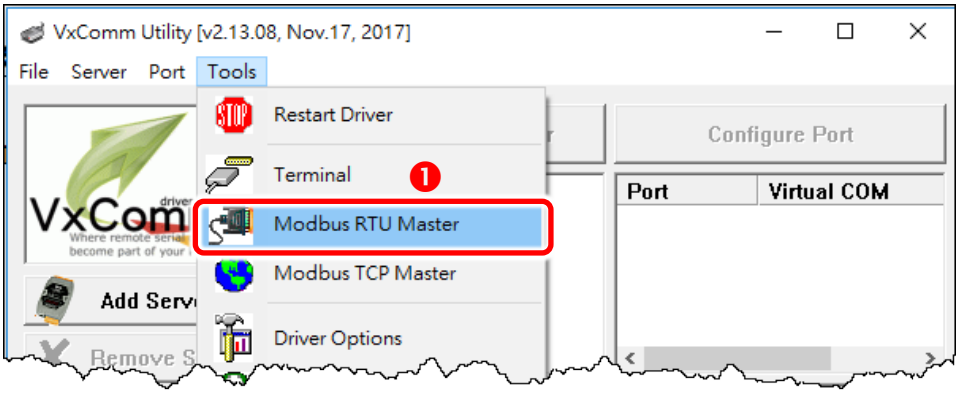

Figure 6.2-4

2. **Select your virtual COM port, Baud Rate and Data Format on PDS series** and then click **"Open"** button to connect the PDS series, for example **virtual Port: COM3, Baud Rate: 19200, Line control: N, 8, 2**.
3. Refer to **"Protocol Description"** and **type Modbus command** in the command field.
   Note: The Modbus command settings depends on your Modbus device.
4. Click the **"Send Command"** button.
5. If the response data is correct, it means the test is success.

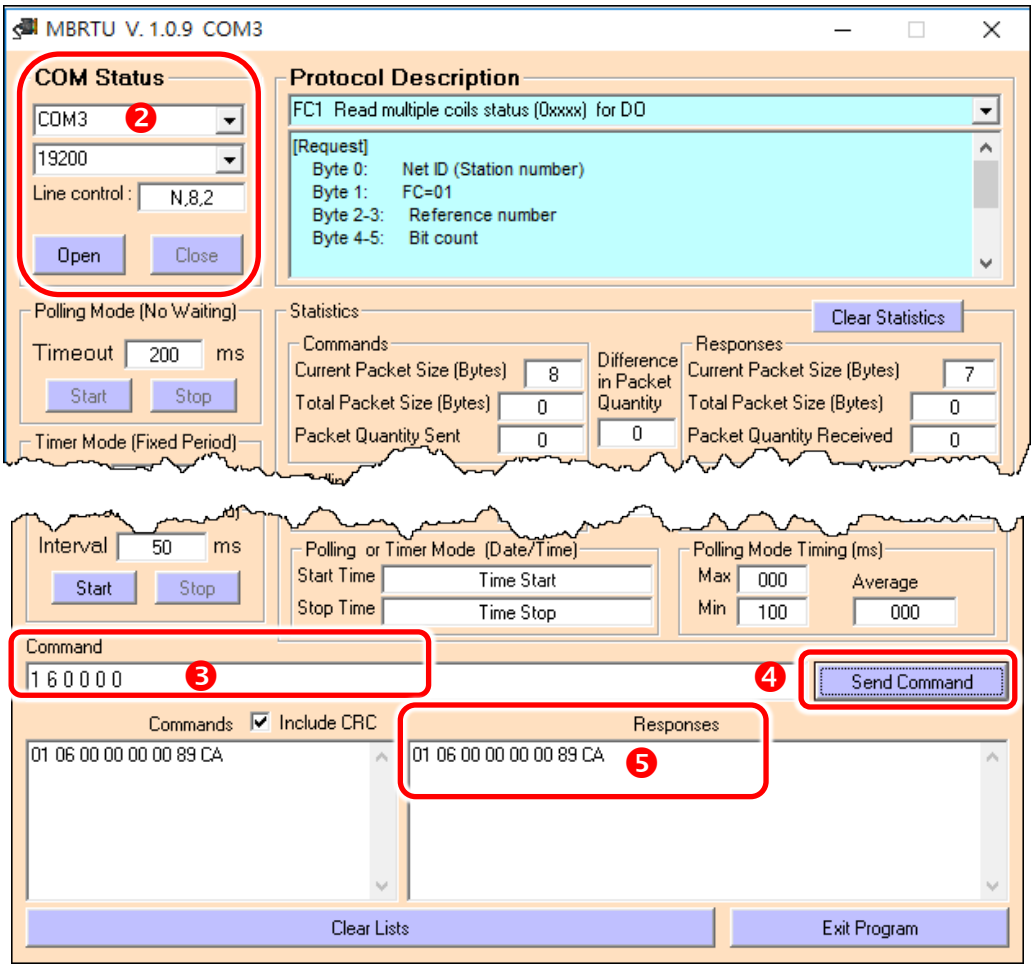

Figure 6.2-5

6.2.1 How do I disable the M3 Mode (Modbus Gateway)

Follow the procedure described below:

1. Click the **"Modbus Gateway Settings"** in the web page.
2. Select the **appropriate COM Port** from the **"Port (COM0 for ALL PORTS)"** drop down options, for example **"COM0"** for all ports, and then enter the **"0"** in the **"Number of ID for serial Modbus device"** field.
3. Checked the **"Save to EEPROM"** and **"Apply the current settings"** options, then click the **"Update"** button to complete the setting.
4. Confirm that the serial COM ports are **"Disable"** in the **"COM Port for Modbus Gateway Settings"** area.

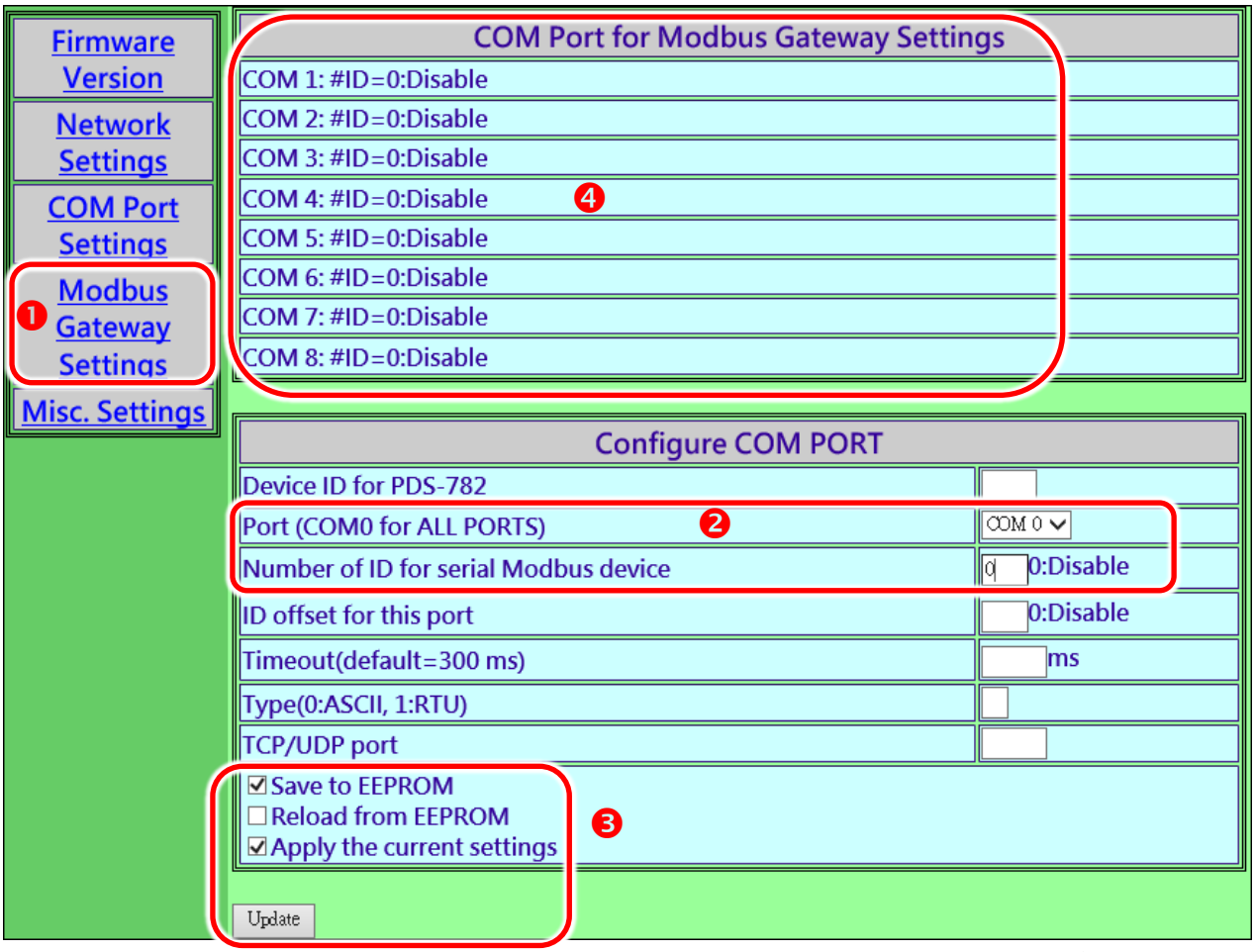

Figure 6.2-6

7. Virtual I/O

PDS series modules provide digital I/O lines, including PDS(M)-721(D), PPDS(M)-721(D)-MTCP, PDS(M)-732(D), PPDS(M)-732(D)-MTCP, PDS(M)-734(D), PPDS(M)-734(D)-MTCP, PDS(M)-743(D), PPDS(M)-743(D)-MTCP, PDS(M)-762(D) and PPDS(M)-762(D)-MTCP. The DI is 0 ~ 30 V_{DC} wide range Digital Input, while the DO is 30 V/100 mA (max.), current sink, open collector digital output. These digital I/O lines can be used to control relays, actuators, switches, etc.

7.1 Testing the Virtual I/O

➢ Step 1: Configuring virtual COM Port to Port I/O on servers

1. Connect both the PDS series module and the Host computer to the same sub-network or the same Ethernet Switch, and then Power-on the PDS series module, as described in the Section 3.1 "Connect the Power Supply and the Host PC" for the.

2. Connect the DO (n) to the DI (n).

For example: the PDS-721 with a 5-port DI and 6-port DO.

DO0 Connect to DI0, DO1 Connect to DI1, DO2 Connect to DI2 and DO3 Connect to DI3.

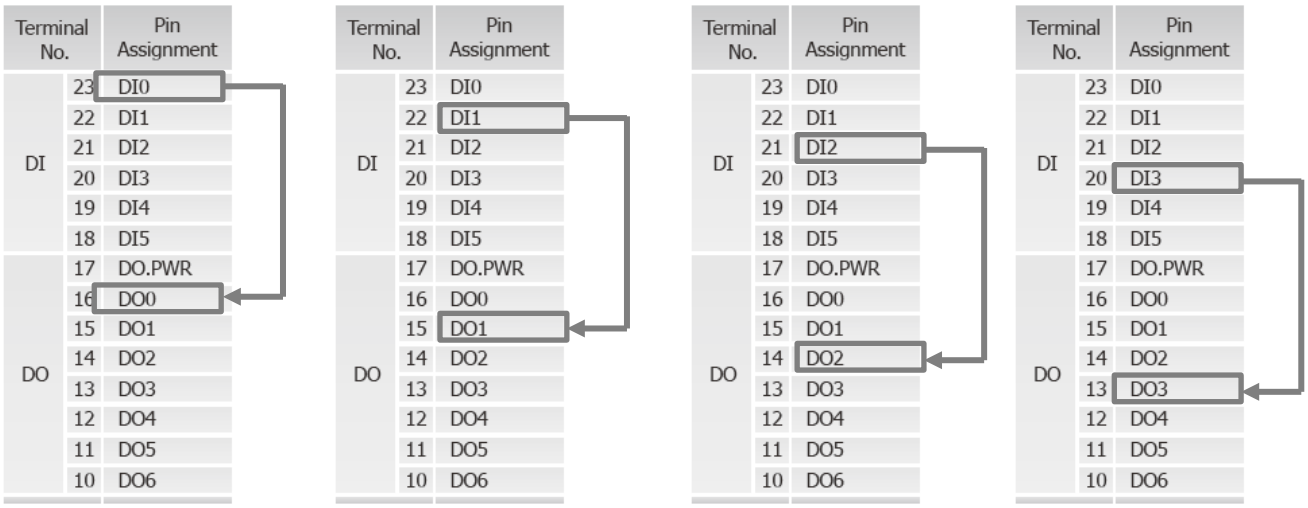

3. Open the **VxComm Utility** and click the **"Search Servers"** button to search for the PDS series module.
4. Click the name of the PDS series module (e.g. PDS-721) to select it.
5. Click the **"Add Server[s]"** button.

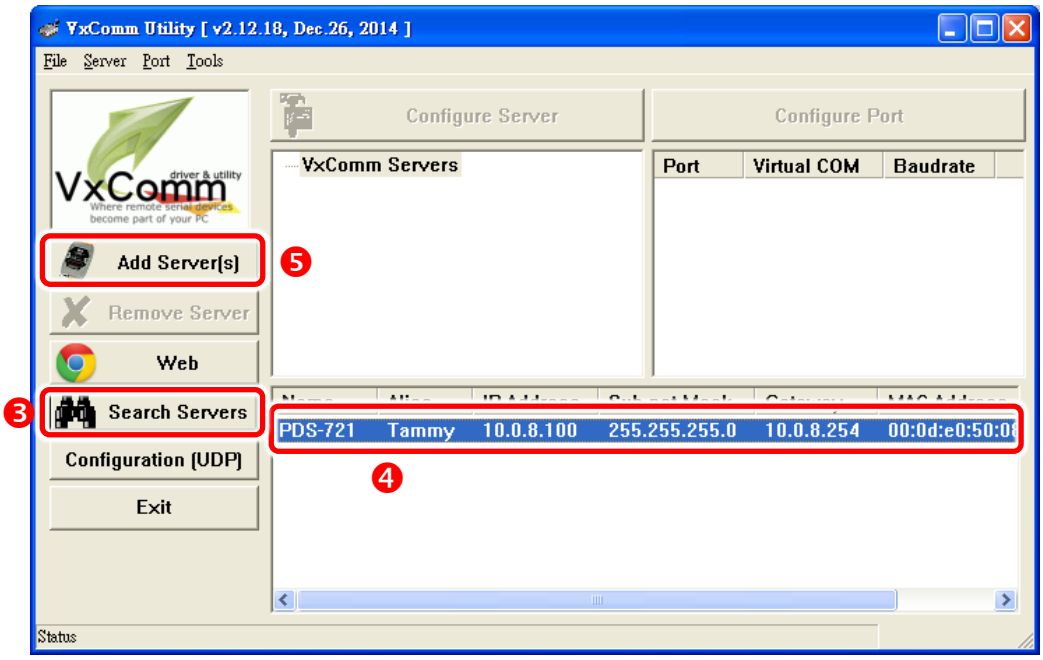

Figure 7-1.1

6. Assign a COM Port number
7. Check the **"Maps virtual COM ports to Port I/O on servers"** option can be enabled to map the I/O Port on the server and click **"OK"** to save your settings.

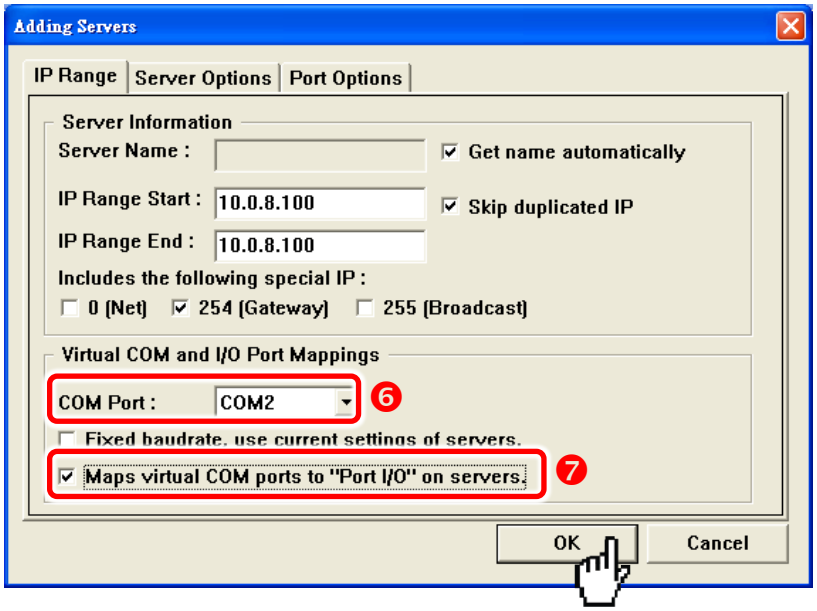

Figure 7-1.2

8. Click **“Tools”** → **“Restart Driver”**, and click the **“Restart Driver”** button.

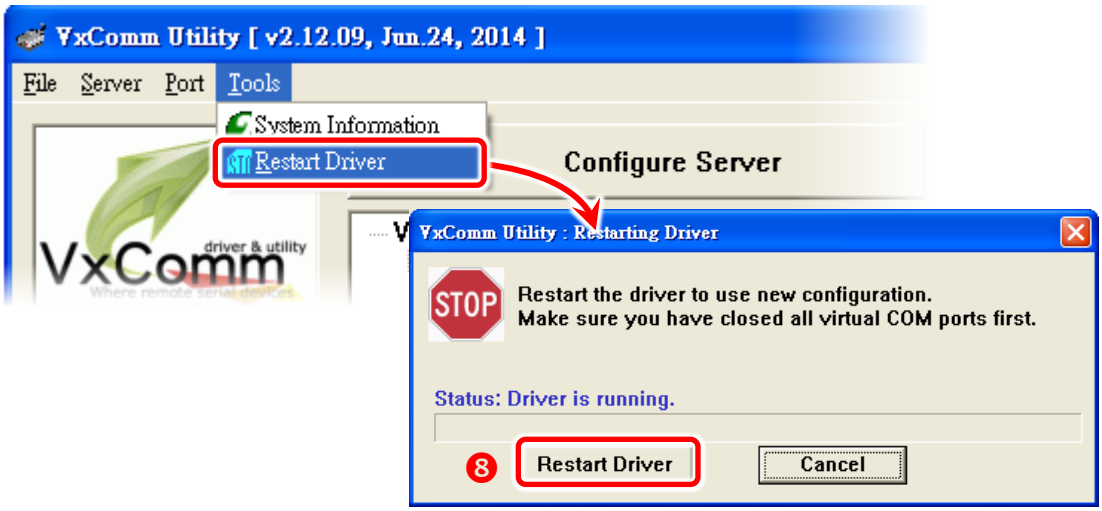

Figure 7-1.3

9. Check the **Virtual COM Port number** shown in the **Port I/O field** in the right-hand pane of VxComm Utility.

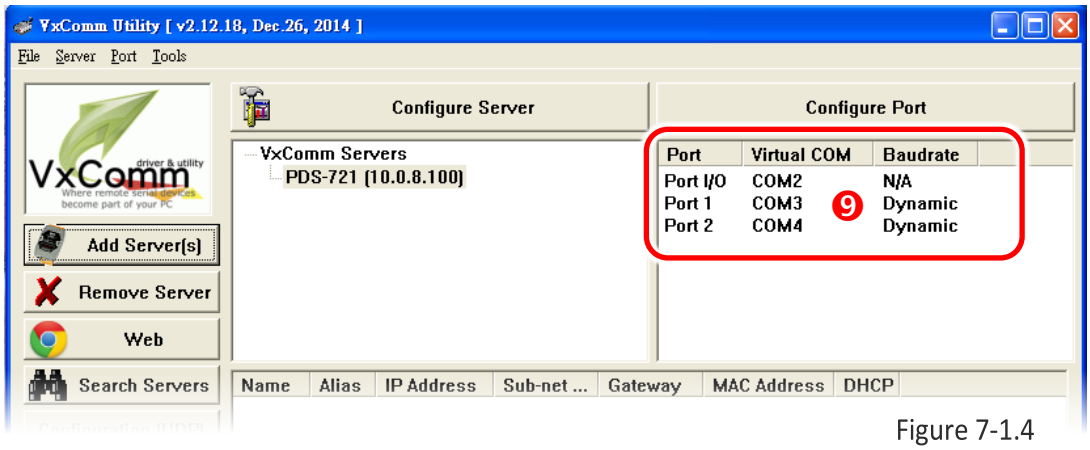

Figure 7-1.4

➢ Step 2: Install the DCON Utility V4.5.0 (or later)

The DCON Utility can be obtained from either the ICP DAS FTP site, or the ICP DAS web site. The location of the download addresses are shown below:

http://ftp.icpdas.com/pub/cd/8000cd/napdos/driver/dcon_utility/

ftp://ftp.icpdas.com/pub/cd/8000cd/napdos/driver/dcon_utility/

➢ Step 3: Testing the Virtual I/O

1. Run the DCON Utility, and click the "**COM Port**" option on the toolbar
2. Select the **Virtual I/O Port number (the same as Port I/O field in the VxComm Utility)**. Check 115200 and 9600 as the Baud Rate, DCON as the protocol, checksum disabled, parity as none, and then click the "**OK**" button.

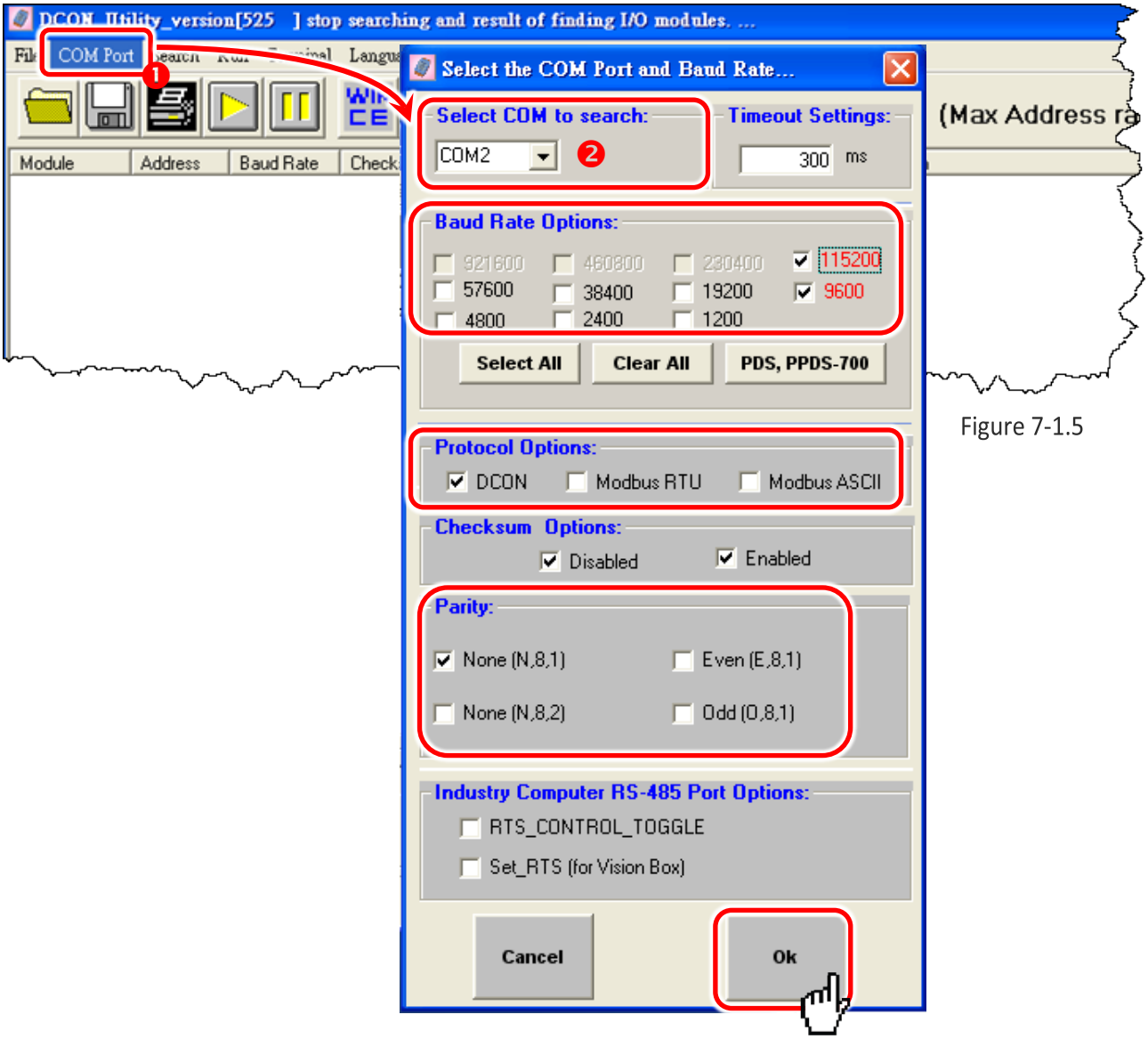

Figure 7-1.5

Note:
If your PDS is not equipped with digital I/O lines, the DCON Utility will return an "Open COM error!" message.

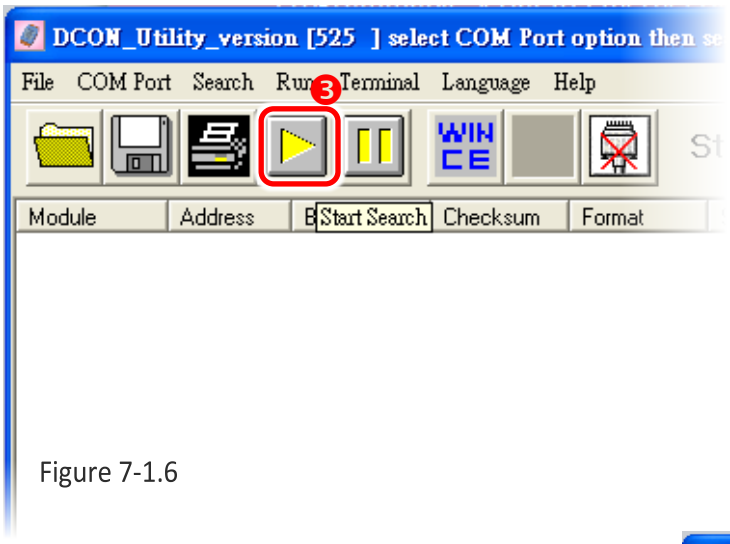

Figure 7-1.6

3. Click the **"Start Search"** button to start searching for the PDS series module

4. The PDS series module is found and is displayed in the DCON Utility.
5. Click the **"Stop Search"** button to stop the search

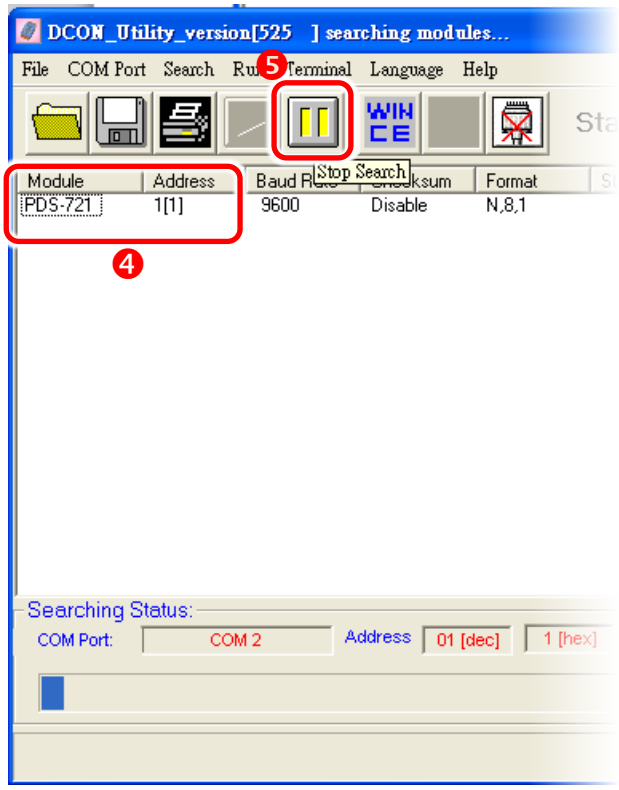

Figure 7-1.7

6. Click on the name of your PDS series module



Figure 7-1.8

7. Click the "**Digital Output**" icon to change the high/low status of the DO.

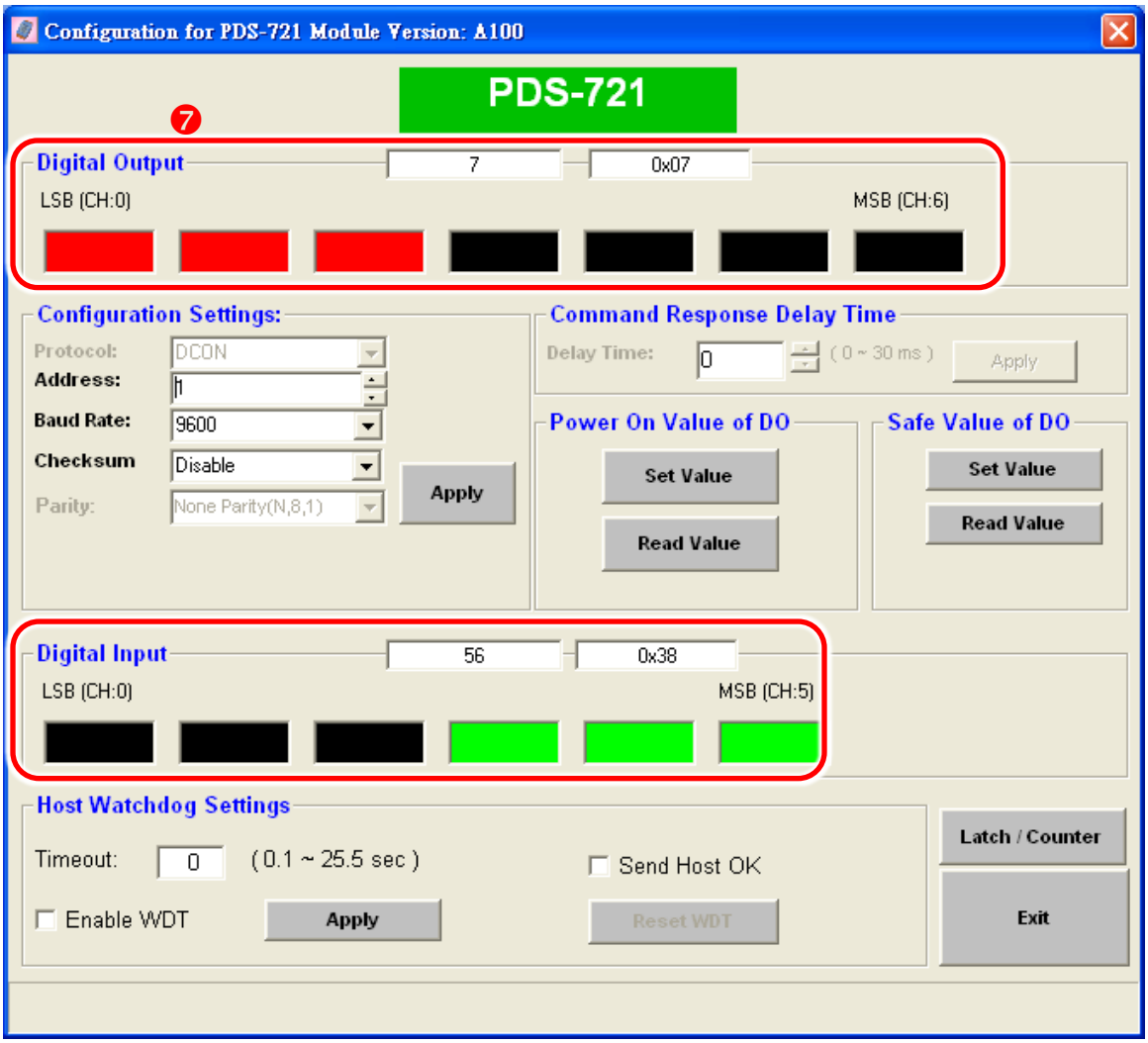

Figure 7-1.9

Since all DI lines are connected to DO lines, the DI read value will be 0 when the DO sends a high state, where as the DI read value will be 1.

7.2 Virtual I/O Command Test

The DCON protocol is a request/reply communication protocol; it defines a simple ASCII format protocol, such as $AAN, $AASi6 and #AAN, etc. used to access the PDS and I-7000/8000/87K series I/O modules.

The Virtual I/O command sets are part of the DCON protocol used to access the digital I/O lines of the PDS from the virtualized COM Port mapped to the I/O port. Only PDS series modules equipped with digital I/O lines will respond to DCON requests.

The DCON Utility can be used to test the Virtual I/O commands:
(The DCON command sets are introduced in Chapter 8 "Virtual I/O Commands")

Step 1: Please ensure that the **Figures 7.1.1 to 7.1.8** are correctly configured.
Step 2: Select "**Terminal**" → "**DCON Command Line**" from the DCON Utility menu.



Figure 7-2.1

Step 3: **Type the Virtual I/O command** in the command column and click the "**Send**" button to send the command.

For example, the command **$01M** is used to read the module name.

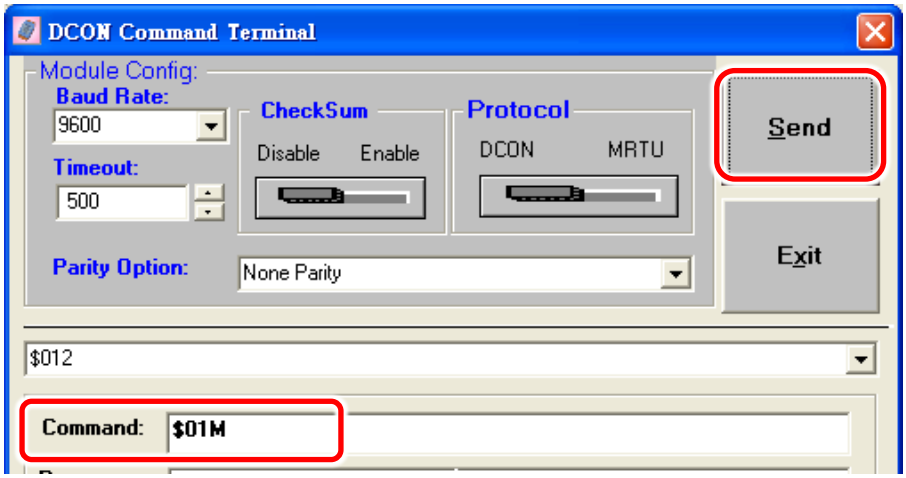

Figure 7-2.2

Step 4: Receive a response from the PDS module that the command was sent successfully.

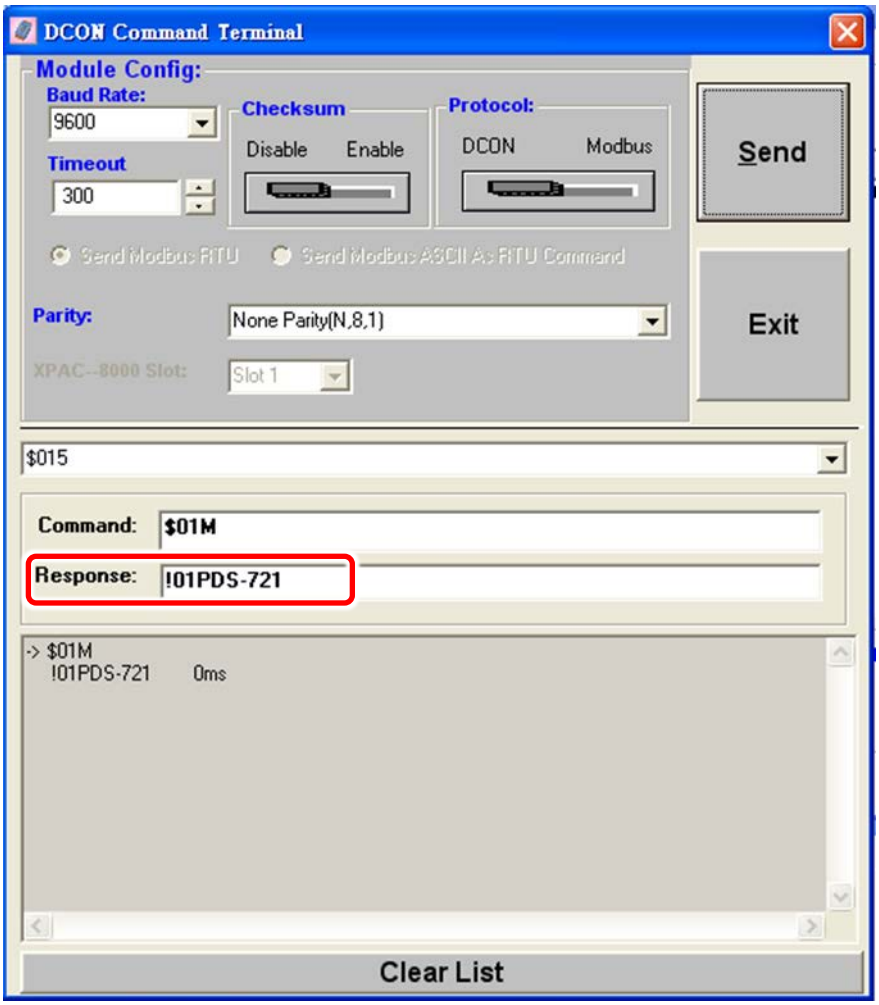

Figure 7-2.3

7.3 Programming on a PC Client

The General DCON Application Programming Interface kit is a set of DLL (lib) functions designed to run on Windows 98/2000/XP that allow access to remote I/O modules such as the PDS-700, I-7000, I-8000 and I-87k series.

The General DCON API kit is located at:

ftp://ftp.icpdas.com/pub/cd/8000cd/napdos/driver/dcon_dll_new/

The General DCON API kit provides VC and VB drivers, VB demos and a document called "**dcon_fun_user_manual.pdf**". Only the DIO demo that can be found in the **dcon_dll_new\demo\vb6** folder supports PDS series modules.
The following steps can be used to test the general DCON API kit with the DIO demo programs.

To run the DIO demo, VB6 must first be installed on the PC.

1. Double click "**prjdio.vbp**" to open the DIO project.
2. Run the demo and set the **Virtual COM Port number** of the PDS
3. Click the "**Open COM Port**" button.
   The response "**COM n Opened!**" will be shown on the title bar.

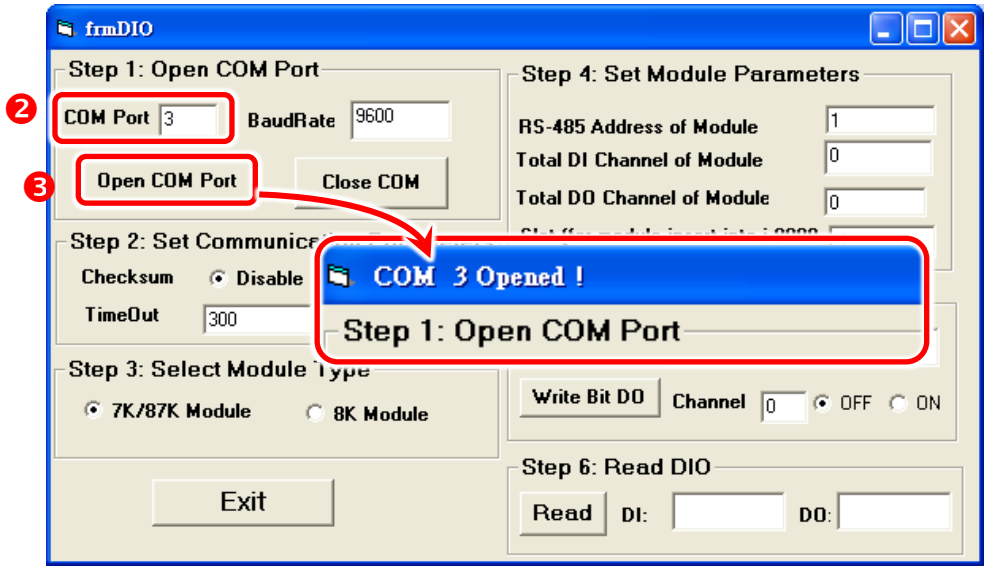

4. Set the total number of DI and DO channels on your PDS series module.
   For instance, the PDS-732 is equipped with 4 DI channels and 4 DO channels.

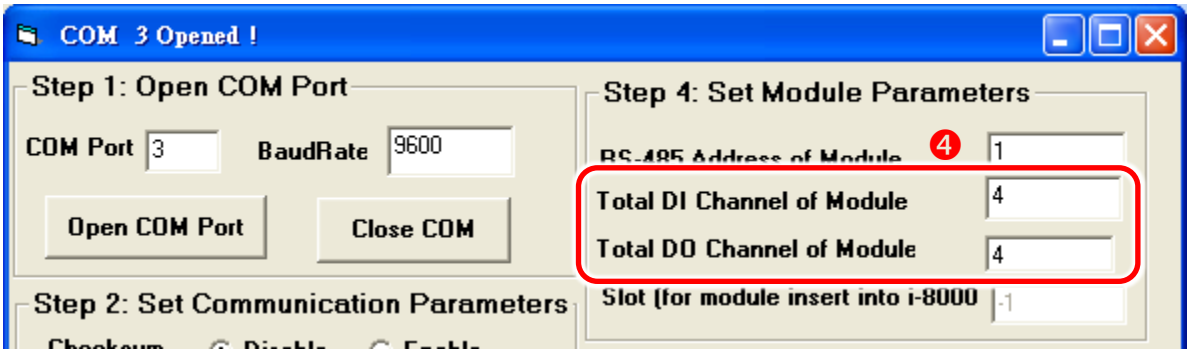

5. Set the Output value and then click the "**Write DO**" button to transmit the data.

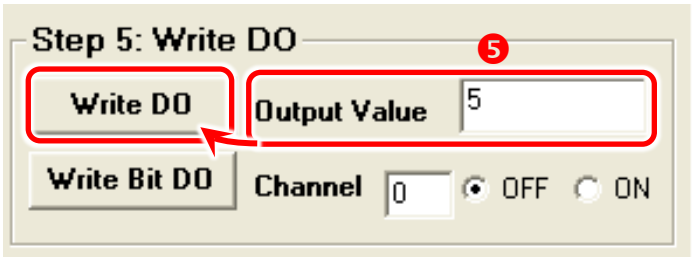

6. Click the "**Read**" button to retrieve the DI data and read the DO data.



7. Press the "**Exit**" button to exit the program.



The functions in the General DCON API kit can be used to access the I/O lines on the PDS series module:

Section	Categorization	Dll and lib	Call condition
7.3.1	**Starting function** Open_Com()	Uart.dll Uart.lib	Called once when the program starts
7.3.4 7.3.5 7.3.6	**I/O function** DCON_Write_DO() DCON_Write_DO_Bit() DCON_Read_DIO()	dcon_pc.dll dcon_pc.lib	Calls the I/O functions for requirements
7.3.3	**Communication** Send_Receive_Cmd()	Uart.dll Uart.lib	Calls the communication functions for requirements
7.3.2	**Ending function** Close_Com()	Uart.dll Uart.lib	Called once before the program exits

```
// DO program demo on a PC client
void CManual1Dlg::OnOpen_Com()
{
    Open_Com(3,115200,8,0,1);
    //COM Port: 3, Baud Rate:115200, Data Bit:8, Parity Bit: 0, Stop Bit: 1
}

void CManual1Dlg::OnClose_Com()
{
   Close_Com(3);  }

void CManual1Dlg::OnDigital_Out()
{
  iRet=DCON_Write_DO(3,1,-1,4,iDO_value,0,100);
    //COM Port: 3, Address: 1, Slot: -1, total channel count:4, DO data,
    //Checksum: disabled, Timeout: 100 (ms)
}
```

7.3.1 Open_Com()

This function opens the specified COM Port.

- **Syntax:**

  Open_Com(unsigned char **cPort**, DWORD **dwBaudrate**, char **cData**, char **cParity**, char **cStop**);

- **Parameters:**

cPort	COM Port number (1 ~ 255)
dwBaudrate	Communication Baud Rate
cData	Data bit, (8 for PDS)
cParity	0 = No parity
cStop	0 = 1 Stop bit

- **Returns:**

0	No error
Others	Error codes

7.3.2 Close_Com()

This function closes the specified COM Port.

- **Syntax:**

  Close_Com(unsigned char **cPort**);

- **Parameters:**

cPort	COM Port number (1 ~ 255)

- **Returns:**

0	No error
Others	Error codes

7.3.3 Send_Receive_Cmd()

This function sends a DCON command string and receives the response.

➢ **Syntax:**

Send_Receive_Cmd(unsigned char **cPort**, char **szCmd[ ]**, char **szResult[ ]**, WORD **wTimeOut**, WORD **wChksum**, WORD ***wT**);

➢ **Parameters:**

cPort	COM Port number (1 ~ 255)
szCmd[ ]	The send string, 1024 bytes maximum, without a zero (0x0D) character
szResult[ ]	The result string recevied, 1024 bytes maximum, with one zero or 0x0D terminal character
wTimeOut	Timeout for receiving the result string. Unit: ms
wChksum	**0**: add one 0x0D byte to the end of the szCmd **<>0**: add two check sum bytes and one 0x0D byte to the end of the szCmd
***wT**	Return a reference number to identify the performance

➢ **Returns:**

0	No error
Others	Error codes

7.3.4 DCON_Write_DO()

This function sends a group of digital output data to the PDS series module.

➢ **Syntax:**

DCON_Write_DO(unsigned char **cComPort**, short **iAddress**, short **iSlot**, short **iDO_TotalCh**, unsigned long **lDO_Value**, short **iCheckSum**, short **iTimeOut**);

➢ **Parameters:**

cComPort	COM Port number 1 to 255
iAddress	Module address **1** for the PDS series module
iSlot	**–1** for the PDS series module
iDO_TotalCh	Total DO channel count on the PDS series module
lDO_Value	Digital output data
iCheckSum	**0:** disabled **1:** enabled
iTimeout	Timeout setting Default = 100 (Unit: ms)

➢ **Returns:**

0	No error
Others	Error codes

7.3.5 DCON_Write_DO_Bit()

This function sends one bit of digital output data to the PDS series module.

➢ **Syntax:**

DCON_Write_DO_Bit(unsigned char **cComPort**, short **iAddress**, short **iSlot**, short **iChannel**, short **iDO_TotalCh**, short **iBitValue**, short **iCheckSum**, short **iTimeOut**);

➢ **Parameters:**

cComPort	COM Port number 1 to 255
iAddress	Module address **1** for the PDS series module
iSlot	**–1** for the PDS series module
iChannel	The digital output channel No.
iDO_TotalCh	Total DO channel count on the PDS series module
lBitValue	1 bit of digital output data **0:** OFF **1:** ON
iCheckSum	**0:** disabled **1:** enabled
iTimeout	Timeout setting Default = 100 (Unit: ms)

➢ **Returns:**

0	No error
Others	Error codes

7.3.6 DCON_Read_DIO()

This function reads the DO and DI lines status.

➢ **Syntax:**

DCON_Read_DIO(unsigned char **cComPort**, short **iAddress**, short **iSlot**, short **iDI_TotalCh**, short **iDO_TotalCh**, short **iCheckSum**, short **iTimeOut**, unsigned long ***lDI_Value**, unsigned long ***lDO_Value**, char ***cDI_BitValue**, char ***cDO_BitValue**);

➢ **Parameters:**

cComPort	COM Port number 1 to 255
iAddress	Module address **1** for the PDS series module
iSlot	**–1** for the PDS series module
iDI_TotalCh	Total DI channel count on the PDS series module
iDO_TotalCh	Total DO channel count on the PDS series module
iCheckSum	**0:** disabled **1:** enabled
iTimeout	Timeout setting Default = 100 (Unit: ms)
iDI_Value	Read digital input data
iDO_Value	Read digital output data
cDI_BitValue	Read digital input data, Boolean array format
cDO_BitValue	Read digital output data, Boolean array format

➢ **Returns:**

0	No error
Others	Error codes

8. Virtual I/O Commands

Command Format: **(Leading)(Address)(Command)[CHK](cr)**
Response Format: **(Leading)(Address)(Data)[CHK](cr)**

(Address)	**2-character, "01" for PDS virtual I/O**
[CHK]	2-character checksum, no checksum for PDS virtual I/O
(cr)	carriage return (0x0D) for ending character of command

➢ **Checksum Calculation:**

1. Calculate the ASCII sum of all characters in the command (or response) string except for the return character (cr).
2. Mask the sum of the string with 0ffh

➢ **Example:**

Command string: $012 (cr)
Sum of the string = '$' + '0' + '1' + '2'
= 24 h + 30 h + 31 h + 32 h
= B7 h

The checksum is B7 h, and [CHK] ="B7".

Command string with checksum: $012B7 (cr)

Response string: !01300600 (cr)
Sum of the string = '!' + '0' + '1' + '3' + '0' + '0' + '6' + '0' + '0'
= 21 h + 30 h + 31 h + 33 h + 30 h + 30 h + 36 h + 30 h + 30 h
= 1AB h

The checksum is AB h, and [CHK] ="AB".

Response string with checksum: !01300600AB (cr)

General Command Sets

Section	Command	Response	Description
8.1	$AA5	!AAS	Reads the Reset Status
8.2	$AA6	!AA(Data)	Reads the Digital I/O Status
8.3	$AAC	!AA	Clears the Latched Digital Input
8.4	$AACn	!AA	Clears the Digital Input Count
8.5	$AAGCN	>AA(Data)	Retrieves the I/O Channel Count
8.6	$AALs	!(Data)	Reads the Latched DI
8.7	$AAF	!AA(Data)	Reads the Firmware Version
8.8	$AAM	!AA(Data)	Reads the Module Name
8.9	@AA	>(Data)	Reads the Digital Input/Output Status
8.10	@AA(Data)	>	Sets the Digital Output
8.11	#AAn	!AA(Data)	Reads the DI counter
8.12	#AA00dd	>	Sets the Multi-channel Output
8.13	#AA1ndd	>	Sets the Single Channel Output

Host Watchdog Command Sets

Section	Command	Response	Description
8.14	~**	No Reponse	Host is OK
8.15	~AA0	!AASS	Reads the Module Status
8.16	~AA1	!AA	Reset Module Status
8.17	~AA2	!AAeff	Reads the Host Watchdog Timeout Value
8.18	~AA3eff	!AA	Sets the Host Watchdog Timeout Value
8.19	~AA4P	!AA(Data)	Reads the Power-on Value for D/O
8.20	~AA4S	!AA(Data)	Reads the Safe Value for the D/O
8.21	~AA5P	!AA	Sets the Power-on Value for the D/O
8.22	~AA5S	!AA	Sets the Safe Value for the D/O

Note:

All commands require a carriage return (0x0D) for ending character.

8.1 $AA5

This function reads the reset status

➢ **Syntax:**

$AA5[CHK](cr)

$	A delimiter character
AA	The address of the module (01 only for PDS)
5	A command for reading the status

➢ **Response:**

Valid Command: **!AAs[CHK](cr)**

Invalid Command: **?AA[CHK](cr)**

*There will be no response if there is a syntax error or a communication error.

!	A delimiter for a valid command
?	A delimiter for an invalid command
AA	The address of the module (01 only for PDS)
s	The reset status: 1 = The Module has been reset, and the status was cleared to 0 after using this command. 0 = the module has never been reset

➢ **Example:**

Command	**Response**
$015	!011
Reads the reset status. Returns read for the first time	
$015	!010
Reads the reset status. Returns that no reset has occurred	

➢ **Related Topics:**

Section 8.16 ~AA1

8.2 $AA6

This function reads the status of the digital I/O channels

➢ **Syntax:**

$AA6[CHK](cr)

$	A delimiter character
AA	The address of the module (01 only for PDS)
6	A command for reading the digital I/O status

➢ **Response:**

Valid Command: **!ddff00[CHK](cr)**

Invalid Command: **?AA[CHK](cr)**

*A Syntax error or a communication error will result in no response.

!	A delimiter for a valid command
?	A delimiter for an invalid command
AA	The address of the module (01 only for PDS)
dd	The current status of the digital output channels
ff	The status of the digital input channel

➢ **Example:**

Command	Response
$016	!0F0000

1. Reads the digital input/output status. Returns 0F00;
2. The status of digital output channels 3 to 0 is set as on.
3. The status of all digital input channels is set to off.

➢ **Related Topics:**

Section 8.9 @AA

8.3 $AAC

This function clears the latched status of the digital Input

➢ **Syntax:**

$AAC[CHK](cr)

$	A delimiter character
AA	The address of the module (01 only for PDS)
C	A command for clearing latched digital inputs

➢ **Response:**

Valid Command: **!AA[CHK](cr)**

Invalid Command: **?AA[CHK](cr)**

*Syntax error or a communication error will result in no response.

!	A delimiter for valid command
?	A delimiter for invalid command
AA	The address of the module (01 only for PDS)

➢ **Example:**

Command	**Response**
$01L0	!FFFF00
Reads the latch-low data. Returns FFFF.	
$01C	!01
Clears the latched digital inputs. Returns success.	
$01L0	!000000
Reads the latch-low data. Returns 0000.	

➢ **Related Topics:**

Section 8.6 $AALs

8.4 $AACn

This function clears the digital input counter

➢ **Syntax:**

$AACn[CHK](cr)

$	A delimiter character
AA	The address of the module (01 only for PDS)
C	A command for clearing the digital input count
n	The digital input channel number

➢ **Response:**

Valid Command: **!AA[CHK](cr)**

Invalid Command: **?AA[CHK](cr)**

*A syntax error or a communication error will result in no response.

!	A delimiter for valid command
?	A delimiter for an invalid command
AA	The address of the module (01 only for PDS)

➢ **Example:**

Command	**Response**
#010	!0100123
Reads the counter value on digital input channel 0. Returns 123.	
$01C0	!01
Clears the counter value on digital input channel 0. Returns success.	
#010	!0100000
Reads the counter value on digital input channel 0. Returns 0.	

➢ **Related Topics:**

Section 8.11 #AAn

8.5 $AAGCN

This function reads the digital input/output channel count

➢ **Syntax:**

$AAGCN[CHK](cr)

$	A delimiter character
AA	The address of the module (01 only for PDS)
GCN	A command for reading the digital input/output channel count

➢ **Response:**

Valid Command: **>DINxxDONxx[CHK](cr)**

Valid Command: **>DONxx[CHK](cr)** (DO only)

Invalid Command: **?AA[CHK](cr)**

* A Syntax error or a communication error will result in no response.

>	A delimiter for valid command
?	A delimiter for invalid command
AA	The address of the module (01 only for PDS)
DINxx	DIN: The digital input channel xx ： The total channel count
DONxx	DON: The digital output channel xx ： The total channel count

➢ **Example:**

Command	**Response**
$01GCN	>DIN01DON02
Reads the total I/O channel count for the module. Returns that the module is equipped with 1 digital input channel and 2 digital output channels.	

8.6 $AALs

This function reads the latched digital Input

➢ **Syntax:**

$AALs[CHK](cr)

$	A delimiter character
AA	The address of the module (01 only for PDS)
L	A command for reading the latched digital input data
s	1 = read latch-high data 0 = read latch-low data

➢ **Response:**

Valid Command: **!(Data)[CHK](cr)**

Invalid Command: **?AA[CHK](cr)**

*A syntax error or a communication error will result in no response.

!	A delimiter for a valid command
?	A delimiter for an invalid command
AA	The address of the module (01 only for PDS)
(Data)	The read data 1 = the input channel is latched 0 = the input channel is not latched

➢ **Example:**

Command	**Response**
$01L1	!FF0000
Read the latch-high data. Returns FF00 meaning that, channel 7 to 0 are all latched. (For modules with a DI channel count between 5 and 8)	
$01L1	!F00000
Reads the latch-high data. Returns FF00 meaning that, channels 3 to 0 are all latched. (For modules with a DI channel count between 1 and 4)	

➢ **Related Topics:**

Section 8.3 $AAC

8.7 $AAF

This function reads the firmware version details

➢ **Syntax:**

$AAF[CHK](cr)

$	A delimiter character
AA	The address of the module (01 only for PDS)
F	A command for reading the firmware version details

➢ **Response:**

Valid Command: **!AA(Data)[CHK](cr)**

Invalid Command: **?AA[CHK](cr)**

*A Syntax error or a communication error will result in no response.

!	A delimiter for a valid command
?	A delimiter for an invalid command
AA	The address of the module (01 only for PDS)
(Data)	The firmware version information

➢ **Example:**

Command	**Response**
$01F	!01A1.00
Read the firmware version details. Returns version No. A1.00	

8.8 $AAM

This function reads the module name

➢ **Syntax:**

$AAM[CHK](cr)

$	A delimiter character
AA	The address of the module (01 only for PDS)
M	A command for reading the module name

➢ **Response:**

Valid Command: **!AA(Data)[CHK](cr)**

Invalid Command: **?AA[CHK](cr)**

*A syntax error or a communication error will result in no response.

!	A delimiter for a valid command
?	A delimiter for an invalid command
AA	The address of the module (01 only for PDS)
(Data)	The name of module

➢ **Example:**

Command	**Response**
$01M	!01PDS-721
Reads the module name. Returns the name PDS-721	

8.9 @AA

This function reads the status of the digital input/output

➢ **Syntax:**

@AA[CHK](cr)

@	A delimiter character
AA	The address of the module (01 only for PDS)

➢ **Response:**

Valid Command: **>(Data)[CHK](cr)**

Invalid Command: **?AA[CHK](cr)**

*A syntax error or a communication error will result in no response.

>	A delimiter for a valid command
?	A delimiter for an invalid command
AA	The address of the module (01 only for PDS)
(Data)	The status of the DIO

➢ **Example:**

Command	**Response**
$01M	>050F

1. Read the status of the DIO. Returns 050F.
2. The first two bytes indicate the status of the DO. 05 means that channel 0 and channel 2 are 1, and the other channels are 0.
3. The last two bytes indicate the status of the DI. 0F means that all 4 channels read are 1

8.10 @AA(Data)

This function sets the digital output

➢ **Syntax:**

@AA(Data)[CHK](cr)

$	A delimiter character
AA	The address of the module (01 only for PDS)
(Data)	The output value
1. (Data) is one character for output channels less than 4 For the PDS(M)-762(D) modules, this will be from 0 to 3 For the PDS(M)-732(D), 734(D), 743(D) modules, this will be from 0 to F 2. (Data) is two characters for output channels less than 8 For the PDS(M)-721(D) modules, this will be from 00 to 7F	

➢ **Response:**

Valid Command: **>[CHK](cr)**

Invalid Command: **?[CHK](cr)**

Ignore Command: **![CHK](cr)**

*A syntax error or a communication error will result in no response.

>	A delimiter for a valid command
?	A delimiter for an invalid command
!	A delimiter for an ignore command, meaning that the module is in Host Watchdog Timeout Mode, and the output is set to safe value.

➢ **Example:**

Command	**Response**
@013	>
Output value 3, Returns success	
@011F	!
Output value 1F. Return that the module is in Host Watchdog Timeout Mode and the output command has been ignored.	

8.11 #AAn

This function reads digital input counter from channel n

➢ **Syntax:**

#AAn[CHK](cr)

#	A delimiter character
AA	The address of the module (01 only for PDS)
n	The digital channel number (from 0)

➢ **Response:**

Valid Command: **!AA(Data)[CHK](cr)**

Invalid Command: **?AA[CHK](cr)**

*A syntax error or a communication error will result in no response.

!	A delimiter for a valid command
?	A delimiter for an invalid command
AA	The address of the module (01 only for PDS)
(Data)	The digital input counter value in decimal format from 00000 to 65535

➢ **Example:**

Command	**Response**
#012	!0100103
Read the digital input counter of channel 2. Returns the value 103	
#013	?01
Read the digital input counter of channel 3. Returns an error including that the channel is not available	

➢ **Related Topics:**

Section 8.4 $AACn

8.12 #AA00dd

This function sets the multi-channel Output

➢ **Syntax:**

#AA00dd[CHK](cr)

#	A delimiter character
AA	The address of the module (01 only for PDS)
00	A command used to set multi-channel output
dd	The output value

➢ **Response:**

Valid Command: **>[CHK](cr)**

Invalid Command: **?[CHK](cr)**

Ignored Command: **![CHK](cr)**

*A syntax error or a communication error will result in no response.

>	A delimiter for a valid command
?	A delimiter for an invalid command
!	A delimiter for an ignore command, meaning that the module is in Host Watchdog Timeout Mode, and the output is set to safe values

➢ **Example:**

Command	**Response**
#01000F	>
Set the digital output of channel 3 to 0 as on. Returns success.	
#010005	!
Set the digital output of channel 0 and 2 as on. Returns that the module is in Host Watchdog Timeout Mode, and the output was been set to safe values.	

➢ **Related Topics:**

Section 8.10 @AA(Data)

Section 8.15 ~AA0

Section 8.16 ~AA1

8.13 #AA1ndd

This function sets the output of a single channel

➢ **Syntax:**

#AA1ndd[CHK](cr)

#	A delimiter character
AA	The address of the module (01 only for PDS)
1n	The command used to set the output of a single channel. n is the digital output channel number.
dd	00: sets the digital output channel to off 01: sets the digital output channel to on

➢ **Response:**

Valid Command: **>[CHK](cr)**

Invalid Command: **?[CHK](cr)**

Ignored Command: **![CHK](cr)**

*A syntax error or a communication error will result in no response.

>	A delimiter for a valid command
?	A delimiter for an invalid command
!	A delimiter for an ignore command, meaning that the module is in Host Watchdog Timeout Mode, and the output is set to safe values

➢ **Example:**

Command	**Response**
#011201	>
Set the digital output of channel 2 to on. Returns success.	

➢ **Related Topics:**

Section 8.10 @AA(Data)

Section 8.15 ~AA0

Section 8.16 ~AA1

8.14 ~**

This function is used to let other modules know that the Host is OK

➢ **Syntax:**

~**[CHK](cr)

~	A delimiter character
**	The command for all modules

➢ **Response:**

No response

➢ **Example:**

Command	Response
~**	No response

➢ **Related Topics:**

Section 8.15 ~AA0
Section 8.16 ~AA1
Section 8.17 ~AA2
Section 8.18 ~AA3eff
Section 8.19 ~AA4P
Section 8.20 ~AA4S
Section 8.21 ~AA5P
Section 8.22 ~AA5S

8.15 ~AA0

The function reads the status of the Host Watchdog

➢ **Syntax:**

~AA0[CHK](cr)

~	A delimiter character
AA	The address of the module (01 only for PDS)
0	The command used to read the status of the module

➢ **Response:**

Valid Command: **!AASS[CHK](cr)**

Invalid Command: **?AA[CHK](cr)**

*A syntax error or a communication error will result in no response.

!	A delimiter for a valid command
?	A delimiter for an invalid command
AA	The address of the module (01 only for PDS)
SS	The status of the module 00 = The Host watchdog status has been cleared, or no timeout occurred. 04 = The Host Watchdog has been set, timeout occurred. Use command ~AA1 to clear the status that recorded in EEPROM.

➢ **Example:**

See the ~AA3eff example in Section 8.18

➢ **Related Topics:**

Section 8.15 ~AA0
Section 8.16 ~AA1
Section 8.17 ~AA2
Section 8.18 ~AA3eff
Section 8.19 ~AA4P
Section 8.20 ~AA4S
Section 8.21 ~AA5P
Section 8.22 ~AA5S

8.16 ~AA1

This function clears the status of the Host Watchdog

➢ **Syntax:**

~AA1[CHK](cr)

#	A delimiter character
AA	The address of the module (01 only for PDS)
1	The command used to reset the status of the module

➢ **Response:**

Valid Command: **!AA[CHK](cr)**

Invalid Command: **?AA[CHK](cr)**

*A syntax error or a communication error will result in no response.

!	A delimiter for a valid command
?	A delimiter for an invalid command
AA	The address of the module (01 only for PDS)

➢ **Example:**

See the ~AA3eff example in Section 8.18

➢ **Related Topics:**

Section 8.15 ~AA0
Section 8.16 ~AA1
Section 8.17 ~AA2
Section 8.18 ~AA3eff
Section 8.19 ~AA4P
Section 8.20 ~AA4S
Section 8.21 ~AA5P
Section 8.22 ~AA5S

8.17 ~AA2

This function reads the Host Watchdog Timeout Value

➢ **Syntax:**

~AA2[CHK](cr)

#	A delimiter character
AA	The address of the module (01 only for PDS)
2	The command used to read the Host Watchdog Timeout Value

➢ **Response:**

Valid Command: **!AAeff[CHK](cr)**

Invalid Command: **?AA[CHK](cr)**

*A syntax error or a communication error will result in no response.

!	A delimiter for a valid command
?	A delimiter for an invalid command
AA	The address of the module (01 only for PDS)
e	The status of the Host Watchdog, 1 = Enabled, 0 = Disabled
ff	The timeout value in Hex format. The unit is 0.1 seconds 01 = 0.1 seconds FF = 25.5 seconds

➢ **Example:**

See the ~AA3eff example in Section 8.18

➢ **Related Topics:**

Section 8.15 ~AA0
Section 8.16 ~AA1
Section 8.17 ~AA2
Section 8.18 ~AA3eff
Section 8.19 ~AA4P
Section 8.20 ~AA4S
Section 8.21 ~AA5P
Section 8.22 ~AA5S

8.18 ~AA3eff

This function sets the Host Watchdog Timeout Value

➢ **Syntax:**

~AA3eff[CHK](cr)

~	A delimiter character
AA	The address of the module (01 only for PDS)
3	The command used to read the Host Watchdog Timeout Value
e	1 = Enabled, 0 = Disabled
ff	The timeout value, from 01 to FF, the unit is 0.1 second

➢ **Response:**

Valid Command: **!AA[CHK](cr)**

Invalid Command: **?AA[CHK](cr)**

*A syntax error or a communication error will result in no response.

!	A delimiter for a valid command
?	A delimiter for an invalid command
AA	The address of the module (01 only for PDS)

➢ **Example:**

Command	**Response**
~010	!0100
Read the status of the module. Returns the status of the Host Watchdog Timeout has been cleared.	
~013164	!01
Set the status of the Host Watchdog Timeout Value to 10.0 seconds and enable the Host Watchdog. Return Success.	
~012	!01164
Read the Host Watchdog Timeout Value. Returns the Host Watchdog Timeout Value is 10.0 seconds, and the Host Watchdog is enabled.	

~**	No response
If the ~** command is not sent within 10 seconds, the LED on the module will begin to flash. The LED indicates that the status of the Host Watchdog Timeout is set.	
~010	!0104
Read the status of the module. Returns the status of the Host Watchdog Timeout Value is set.	
~012	!01064
Read the Host Watchdog Timeout Value. Returns the Host Watchdog Timeout Value is 10.0 seconds, and the Host Watchdog is disabled.	
~011	!01
Reset the status of the Host Watchdog Timeout. Returns success, and the LED stops flashing.	
~010	!0100
Read the module status. Returns that the status of the Host Watchdog Timeout has been clear.	

➢ **Related Topics:**

Section 8.15 ~AA0
Section 8.16 ~AA1
Section 8.17 ~AA2
Section 8.18 ~AA3eff
Section 8.19 ~AA4P
Section 8.20 ~AA4S
Section 8.21 ~AA5P
Section 8.22 ~AA5S

8.19 ~AA4P

This function reads the Power-on Values for the DO

➢ **Syntax:**

~AA4P[CHK](cr)

~	A delimiter character
AA	The address of the module (01 only for PDS)
4P	The command used to read the power-on value for the DO

➢ **Response:**

Valid Command: **!AA(Data)[CHK](cr)**

Invalid Command: **?AA[CHK](cr)**

*A syntax error or a communication error will result in no response.

!	A delimiter for a valid command
?	A delimiter for an invalid command
AA	The address of the module (01 only for PDS)
(Data)	The power-on values

➢ **Example:**

Command	**Response**
~014P	!01000F
Read the power-on values. Returns the power-on value 0F	

➢ **Related Topics:**

Section 8.21 ~AA5P

8.20 ~AA4S

This function reads the Safe Values for the DO

➢ **Syntax:**

~AA4S[CHK](cr)

~	A delimiter character
AA	The address of the module (01 only for PDS)
4S	The command used to read the power-on value for the DO

➢ **Response:**

Valid Command: **!AA(Data)[CHK](cr)**

Invalid Command: **?AA[CHK](cr)**

*A Syntax error or a communication error will result in no response.

!	A delimiter for a valid command
?	A delimiter for an invalid command
AA	The address of the module (01 only for PDS)
(Data)	The power-on values

➢ **Example:**

Command	**Response**
~014S	!01000F
Read the safe values. Returns the power-on value 0F	

➢ **Related Topics:**

Section 8.22 ~AA5S

8.21 ~AA5P

This function sets the Power-on Value for the DO

➢ **Syntax:**

~AA5P[CHK](cr)

~	A delimiter character
AA	The address of the module (01 only for PDS)
5P	The command used to read the power-on value for the DO

➢ **Response:**

Valid Command: **!AA[CHK](cr)**

Invalid Command: **?AA[CHK](cr)**

*A syntax error or a communication error will result in no response.

!	A delimiter for a valid command
?	A delimiter for an invalid command
AA	The address of the module (01 only for PDS)

➢ **Example:**

Command	**Response**
@0103	>
Output the value 03. Returns success	
~015P	!01
Set the current output status as power-on value, return success.	

➢ **Related Topics:**

Section 8.19 ~AA4P

8.22 ~AA5S

This function sets the Safe Value for the DO

➢ **Syntax:**

~AA5S[CHK](cr)

~	A delimiter character
AA	The address of the module (01 only for PDS)
5S	The command used to set the safe value for the DO

➢ **Response:**

Valid Command: **!AA[CHK](cr)**

Invalid Command: **?AA[CHK](cr)**

*A syntax error or a communication error will result in no response.

!	A delimiter for a valid command
?	A delimiter for an invalid command
AA	The address of the module (01 only for PDS)

➢ **Example:**

Command	**Response**
@0103	>
Output the value 03. Returns success	
~015S	!01
Set the current output status as the safe value. Returns success.	

➢ **Related Topics:**

Section 8.20 ~AA4

8.23 Application Notes

➢ Hot Watchdog Status

The Power On Reset or Module Watchdog Reset will return all output settings to Power On Values. The Host Watchdog Timeout will return all output values to Safe Values. Additionally, the status of the Host Watchdog, which can be read using the ~AA0 command, will be recorded as 04, and output commands will be ignored until the status is cleared to 0 by using command ~AA1.

➢ Dual Watchdog Operation

Dual Watchdog = Module Watchdog + Host Watchdog

The Module Watchdog is a hardware reset circuit that is used to monitor the operating status of the module. When working in harsh or noisy environments, the module may be interrupted by external signals. The circuit can let the module reboot automatically and to work continues without halt.

The Host Watchdog is a software function that is used to monitor the operating status of the host. Its purpose is to keep PDS's output in a safe state when there is network communication problem or host PC halt. If the timeout interval expires, the module will turn all outputs to the predefined Safe Value and prevent unexpected situation from occurring.

The PDS series with Dual Watchdog will make the control system more reliable and stable.

➢ Reset Status

The Reset Status is set when the module is powered on or if it is reset by the Module Watchdog. The status can be cleared by using the Reset Status ($AA5) command. This is useful for checking the operating status of the module. When the Reset Status is set it means that the module has been reset and the output can be changed to the Power On Value. When the Reset Status is clear it means the module was not been reset, and the output was not changed.

➢ Digital Output

The output status of the module has three different conditions:

1. **Safe Value**: If the Host Watchdog Timeout status is set, the output is set to the Safe Value. If the module receives an output command, such as @AA(Data) or #AABBDD, the module will ignore the command and return '!', and will not change the output to the output command value. The Host Watchdog Timeout status is set and store into EEPROM while the Host Watchdog Timeout interval has expired, and can only be cleared by setting the command ~AA1.

   If user needs to change the output, the Host Watchdog Timeout status needs to be cleared first, and an output command need to be sent to change the output to the desired value.

2. **PowerOn Value:** Once the module is reset, and the Host Watchdog Timeout status has been cleared, the output of the module is set to a predefined Power On Value.

3. **Output command value:** If the Host Watchdog Timeout status is clear, and the user issues a digital output command, to the module to change the output value, such as @AA (Data) or #AABBDD, the module will respond "success" (receive >).

➢ Latch Digital Input

If, for example, the user connects a key switch to the digital input channel and wants to read the keystrokes, the key input is a digital input pulse, and the keystroke will be lost. By using command



$AA6 to read the A and B positions, the response would be that there was no keystroke and the keystroke information will be lost. The read latch-low digital input command, $AAL0, will solve this problem. When issuing a $AAL0 command at the A and B positions, the response will denote that there is a low pulse between A and B position signifying a keystroke.

9. Console/Telnet Commands List

9.1 Operation Flowchart

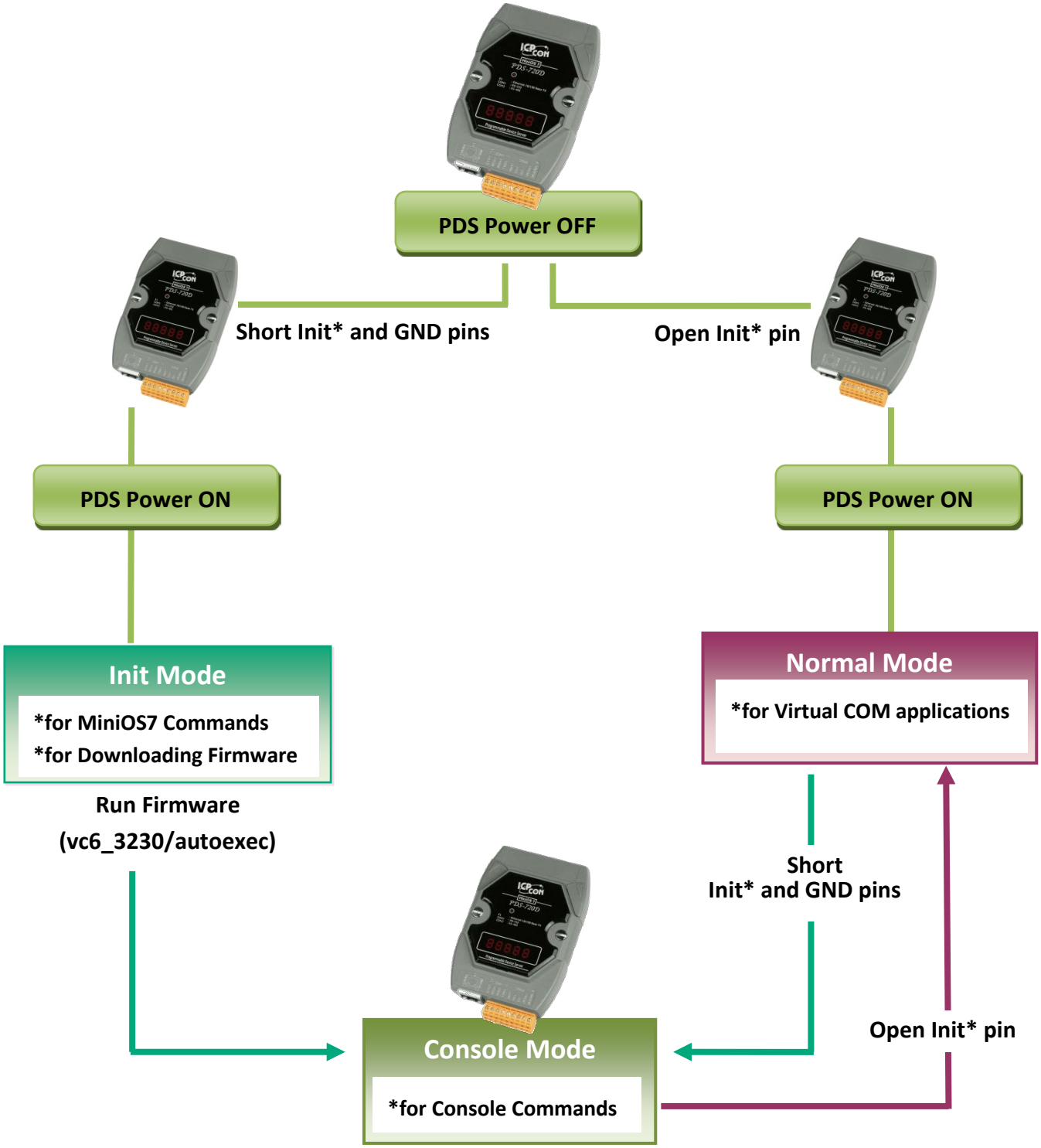

9.2 Comparison Sheet (Init, Run and Console Modes)

Mode	Firmware	Init* and GND Pins	VCOM Commands	Telnet Commands	Console Commands
Init	Stop	-	No	No	No
	Init Mode is used to upgrade firmware and accepts MiniOS7 commands (from PDS.COM1) only.				
Run	Running	Open	Yes	Yes	No
	Run Mode is used for Virtual COM applications, and accepts Virtual COM commands (TCP port 10000) and Telnet commands (TCP port 23).				
Console	Running	Short	Yes	Yes	Yes
	Console Mode is used to configure the Virtual COM. PDS.COM1 is the console port that accepts console commands while other ports are still working with Virtual COM applications.				

9.3 Command List

Section	Command	Description
9.3.1	**IPFILTER**	Retrieves/Sets the IP addresses that are allowed to access the PDS.
9.3.2	**IPCONF**	Queries the network configuration. (IP/Mask/Gateway/MAC addresses).
9.3.3	**SOCKET**	Lists all the status of sockets (Listen/Not Used Yet) together with the type of each socket (TCP Server: Port No./UDP/Unused).
9.3.4	**COM**	Queries or sets the configuration of the COM Ports (Baud Rate/Parity /Stop Bits)
9.3.5	**Broadcast**	Queries or sets the Broadcast parameter, which determines whether or not the module can receive Broadcast packets.
9.3.6	**SystemTimeout**	If PDS has no network communications during the SystemTimeout period, the PDS will reboot it-self automatically.
9.3.7	**SocketTimeout**	If there is no data send/receive on the connection during the SocketTimeout period, the PDS will close the connection automatically.
9.3.8	**M**	Gets/Sets the echo mode. /M0: Transparent Mode, Multi-Echo, Data-Shared. /M1: Slave Mode, Single-Echo, None-Shared.
9.3.9	**EchoCmdNo**	Queries or sets the EchoCmdNo parameter that enables or disables adding Command Number before response.
9.3.10	**EndChar**	Sets a character that determines the end of a response string.
9.3.11	**IP**	Queries or sets the IP address.
9.3.12	**MASK**	Queries or sets the subnet Mask value.
9.3.13	**GATEWAY**	Queries or sets the Gateway address.
9.3.14	**MAC**	Queries the MAC address.
9.3.15	**NAME**	Queries the module name.
9.3.16	**ALIAS**	Sets the alias for a PDS.
9.3.17	**DHCP**	Enables/Disables the DHCP client.
9.3.18	**UDP**	Sets whether to reply to a UDP search command.
9.3.19	**VER**	Queries the version information
9.3.20	**SAVE**	Determines whether or not backup copies of the "autoexec.bat" and "vcom.ini" files are saved when using the “load” command.
9.3.21	**LOAD**	Loads file to the built-in flash disk on PDS. It should be used to update firmware only.
9.3.22	**CONFIG**	Restores the factory default settings.
9.3.23	**RESET**	Reboots the PDS module.
9.3.24	**QUIT**	Exits the running firmware.

9.3.1 IPFILTER

This command is used to query or edit IP filter table. The IP filter table restricts the access of packets based on the IP header. If one or more IP addresses are saved into the IP filter table, only clients whose IP is specified in the IP filter table can access the PDS.

Effect: Immediate

Command	Arguments	Description
ipfilter		Queries the IP filter table.
ipfilter	ADD ip1 ADD ip1 ip2	Adds an IP address to the IP filter table. Adds a range of IP addresses (ip1 ~ ip2) to the IP filter table.
ipfilter	DEL ip1 DEL ip1 ip2	Deletes an IP address (ip1) from the IP filter table. Deletes a range of IP addresses (ip1 ~ ip2) from the IP filter table. The IP address that follows the DEL command should already be listed in the IP filter table.
ipfilter	DEL #n	Deletes item "n" from the IP filter table.
ipfilter	DEL @	Deletes all items from the IP filter table.
ipfilter	SAVE	Saves the IP filter table to the EEPROM. If the IP filter table is empty, the data in EEPROM will be cleared.
ipfilter	LOAD	Loads the IP filter table from the EEPROM.

※The IP filter table is loaded automatically when the PDS is booted.

※Use the "ipfilter save" command to save a new IP filter table to the EEPROM.

Refer to Figure 9-3.1 for detail illustrations.

Figure 9-3.1: The following is an example of a **IPFILTER** configuration.

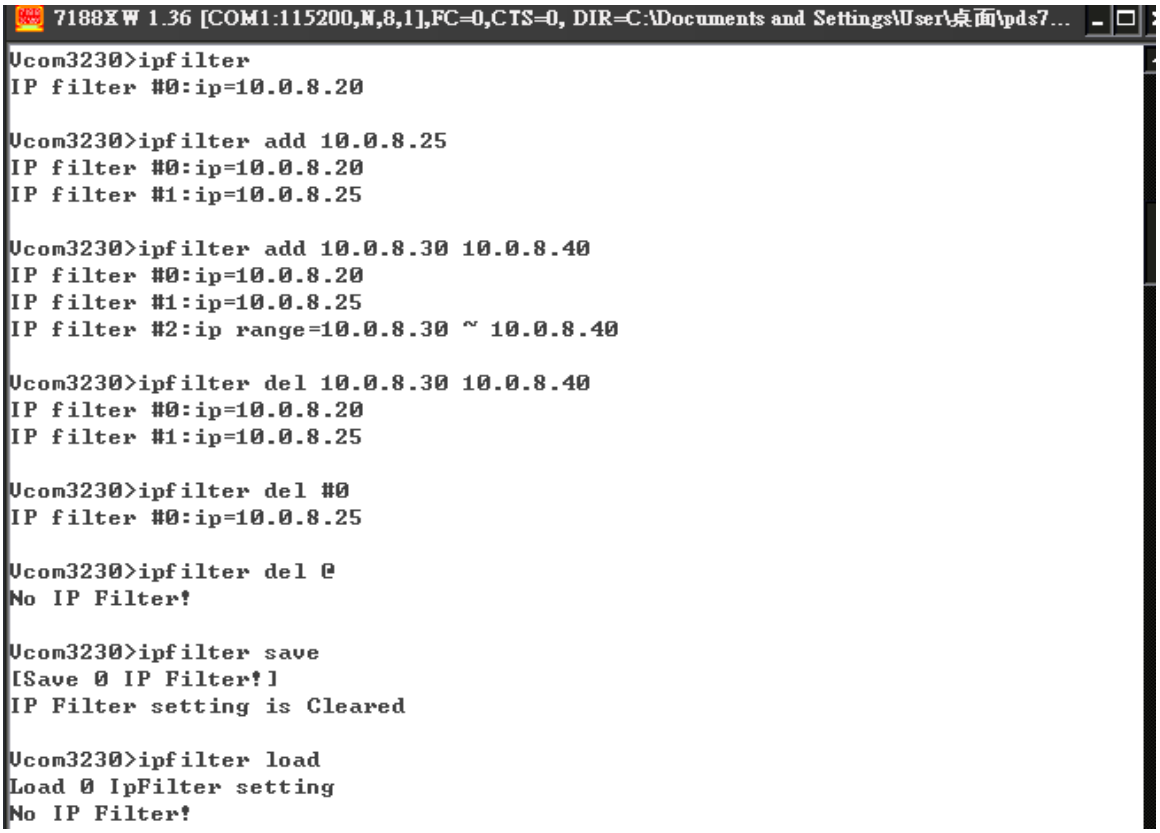

9.3.2 IPCONF

This command is used to display the network configuration information, such as IP address, Mask Address, Gateway address and MAC address and the status of DHCP, ACK_Delay, Free Memory and Socket status.

Effect: Immediate

Command	Arguments	Description
ipconf		Queries the network configuration.

Figure 9-3.2: The following is an example of a **IPCONF** configuration.



9.3.3 SOCKET

This command lists the status of all sockets (Listen/Not Used Yet) together with the type of each socket (TCP Server: Port No./UDP/Unused)

If stat = 1, the socket is used.
If stat = 0, the socket is not yet used.

Effect: Immediate

Command	Arguments	Description
socket		Lists the status of all sockets.

Figure 9-3.3: The following is an example of a **SOCKET** configuration.

```
7188XW 1.36 [COM1:115200,N,8,1],FC=0,CTS=0, DIR=C:\Documents and Settings\User\桌面\pds7...
Vcom3230>socket
[00=16:LISTEN],stat=1 , [01=16:LISTEN],stat=1
[02=16:LISTEN],stat=1 , [03=16:LISTEN],stat=1
[04=16:LISTEN],stat=1 , [05=16:LISTEN],stat=1
[06=16:LISTEN],stat=1 , [07=16:LISTEN],stat=1
[08=01:ESTABLISHED],stat=1 , [09=01:ESTABLISHED],stat=1
[10=00:NOT_USED_YET],stat=0 , [11=00:NOT_USED_YET],stat=0
[12=00:NOT_USED_YET],stat=0 , [13=00:NOT_USED_YET],stat=0
[14=00:NOT_USED_YET],stat=0 , [15=00:NOT_USED_YET],stat=0
[16=00:NOT_USED_YET],stat=0 , [17=00:NOT_USED_YET],stat=0
[18=00:NOT_USED_YET],stat=0 , [19=00:NOT_USED_YET],stat=0
[20=00:NOT_USED_YET],stat=0 , [21=00:NOT_USED_YET],stat=0
[22=00:NOT_USED_YET],stat=0 , [23=00:NOT_USED_YET],stat=0
[24=00:NOT_USED_YET],stat=0 , [25=00:NOT_USED_YET],stat=0
[26=00:NOT_USED_YET],stat=0 , [27=00:NOT_USED_YET],stat=0
[28=00:NOT_USED_YET],stat=0 , [29=00:NOT_USED_YET],stat=0
[30=00:NOT_USED_YET],stat=0 , [31=00:NOT_USED_YET],stat=0
Socket Type:
[00]:TCP Server:10001 , [01]:TCP Server:10002
[02]:TCP Server:10003 , [03]:TCP Server:10004
[04]:TCP Server:10005 , [05]:TCP Server:10000
[06]:TCP Server:23 , [07]:TCP Server:80
[08]:UDP          , [09]:UnUsed
[10]:UnUsed       , [11]:UnUsed
[12]:UnUsed       , [13]:UnUsed
[14]:UnUsed       , [15]:UnUsed
[16]:UnUsed       , [17]:UnUsed
[18]:UnUsed       , [19]:UnUsed
[20]:UnUsed       , [21]:UnUsed
[22]:UnUsed       , [23]:UnUsed
[24]:UnUsed       , [25]:UnUsed
[26]:UnUsed       , [27]:UnUsed
[28]:UnUsed       , [29]:UnUsed
[30]:UnUsed       , [31]:UnUsed
```

9.3.4 COM

This command queries or sets the configuration of the COM Ports (Baud Rate/Parity/Stop bits).

Effect: Immediate

Command	Arguments	Description
com		Queries the configuration of all COM Ports.
com	n	Queries configuration of COM Port "n". If n = 0, the configuration of all COM Ports will be listed in the same way as using the command "com" above.
com	N= BaudRate, DataBits, Parity,StopBit(s)	Sets the configuration of COM Port "n". If n = 0, the settings will be valid for all Com Ports on the PDS.

Figure 9-3.4: The following is an example of a **COM** configuration.

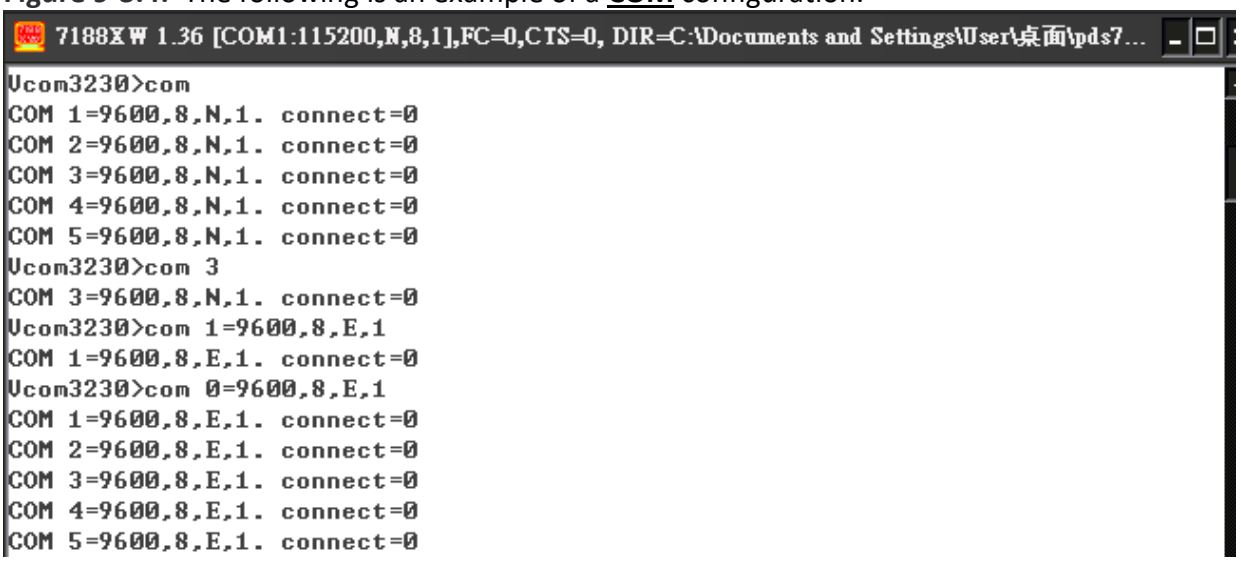

9.3.5 Broadcast

This command is used to Enable/Disable listening broadcast packets on PDS.

Effect: Immediate

Command	Arguments	Description
Broadcast		Queries the Broadcast settings.
Broadcast	= 1	Sets Broadcast = 1. The system is able to receive broadcast packets.
Broadcast	= 0	Sets Broadcast = 0. The system will ignore broadcast packets.

Figure 9-3.5: The following is an example of a **Broadcast** configuration.

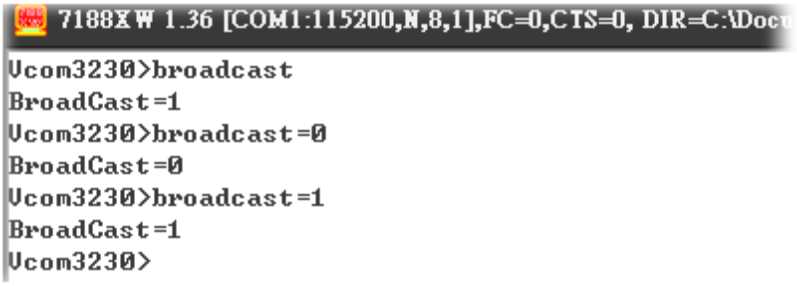

9.3.6 SystemTimeout

This command queries or sets the system timeout value.

If the SystemTimeout is greater than zero, and the PDS does not receive any packets from any client for longer than the SystemTimeout period, the PDS will reboot itself.

Effect: Immediate

Command	Arguments	Description
SystemTimeout		Queries the SystemTimeout settings.
SystemTimeout	= nnnnn	Sets the SystemTimeout. (Unit : ms) Default factory setting is 300000 ms (= 300 seconds = 5 minutes) Min. value is 30000 ms (= 30 seconds)

Figure 9-3.6: The following is an example of a **SystemTimeout** configuration.

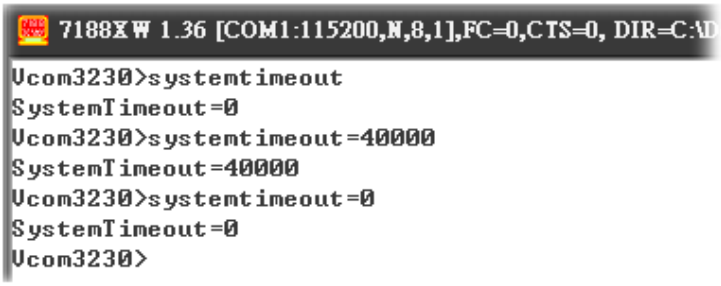

9.3.7 SocketTimeout

This command is used to query or set the SocketTimeout parameter.

If the SocketTimeout is greater than zero, and the PDS does not receive any data from a client PC for longer than the SocketTimeout period, the PDS will close the socket connection between itself and the client PC.

Effect: Immediate

Command	Arguments	Description
SocketTimeout		Queries the SocketTimeout settings.
SocketTimeout	= nnnnn	Sets the SocketTimeout. (Unit : ms) Default = 0 (disable) Min. = 10000

Figure 9-3.7: The following is an example of a **SocketTimeout** configuration.

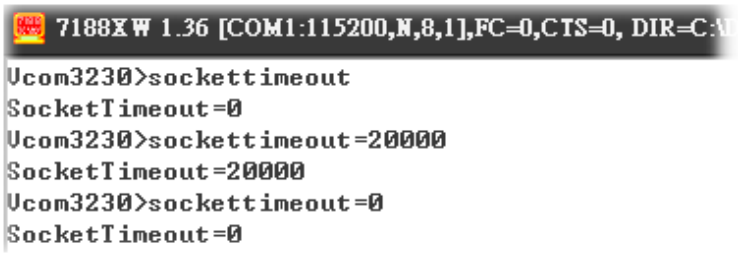

9.3.8 M

This command is used to query or set the echo mode.

Effect: Immediate

Command	Arguments	Description
M		Queries the echo mode settings.
M	= 0	Sets the Multi-echo mode to enable. When set to multi-echo mode, the PDS echoes data from a device to all clients that are connected.
M	= 1	Sets the Single-echo mode to enable. When set to single-echo mode, the PDS echoes data from a device to the client that requested the service.
M	=2	Sets the Half-Save Mode to enable. If only one client connects to the PDS, the operation mode same as M0 mode; and if there are two or more clients connecting to the PDS, the operation mode same as M1 mode.

Figure 9-3.8: The following is an example of a **M** configuration.

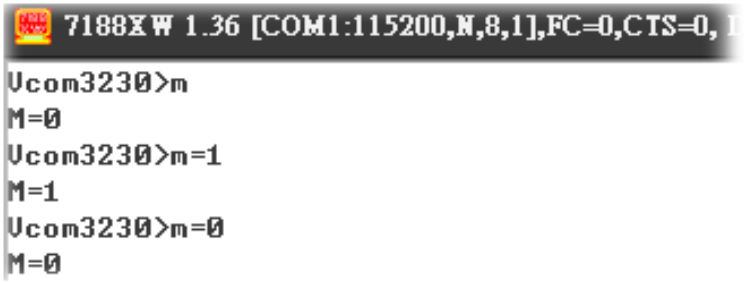

9.3.9 EchoCmdNo

This command is used to query or set the EchoCmdNo parameter.

The EchoCmdNo parameter is used to set whether the PDS prefixes the Virtual COM command to the corresponding response. (Virtual COM commands are used to configure a PDS through TCP port 10000)

Effect: Immediate

Command	Arguments	Description
EchoCmdNo		Queries the EchoCmdNo settings.
EchoCmdNo	= 0	If EchoCmdNo = 0, a Virtual COM command number will not be prefixed to the corresponding response.
EchoCmdNo	= 1	If EchoCmdNo = 1, a Virtual COM command number will be prefixed to the corresponding response.

Figure 9-3.9: The following is an example of a **EchoCmdNo** configuration.

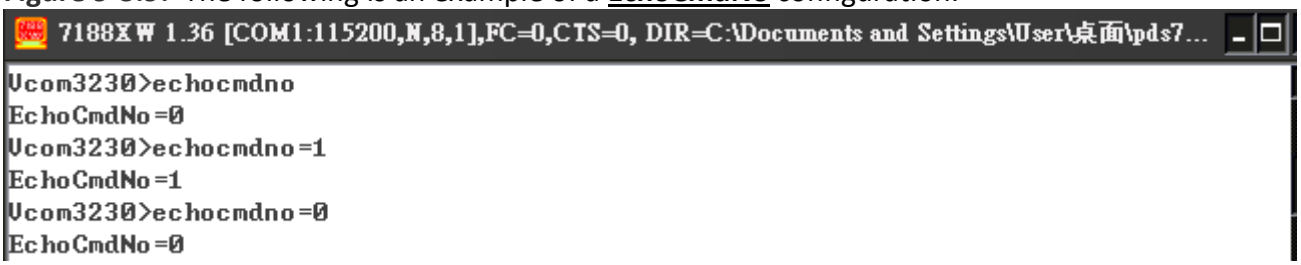

EchoCmdNo = 0

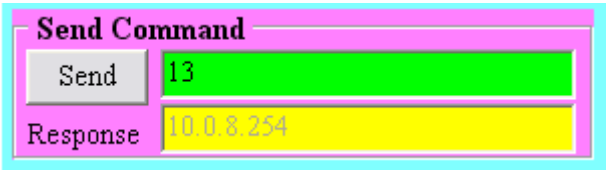

EchoCmdNo = 1

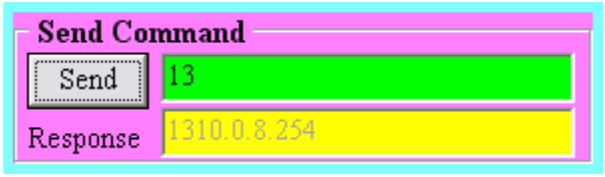

9.3.10 EndChar

This command is used to query or set the EndChar parameter.

PDS sends out the response string from serial port to TCP client immediately when it received a char on the response string that matching the EndChar.

Set EndChar = 00 to disable the EndChar feature.

Effect: Immediate

Command	Arguments	Description
Endchar		Queries the endchar setting.
Endchar	= HH	Sets the endchar.

Figure 9-3.10: The following is an example of a **EndChar** configuration.

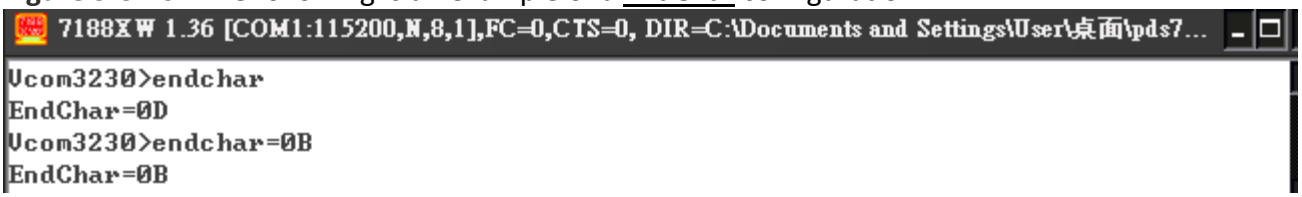

EndChar = 0D

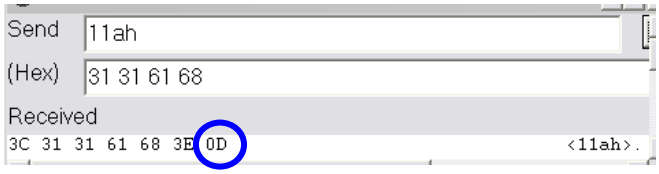

EndChar = 0B

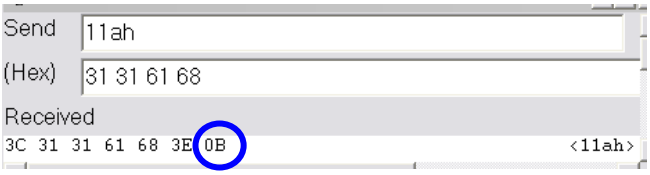

9.3.11 IP

This command is used to query or set the IP address.

Effect: After the next reboot.

Command	Arguments	Description
IP		Queries the IP address.
IP	= xxx.xxx.xxx.xxx	Sets the IP address.

Figure 9-3.11: The following is an example of a **IP** configuration.

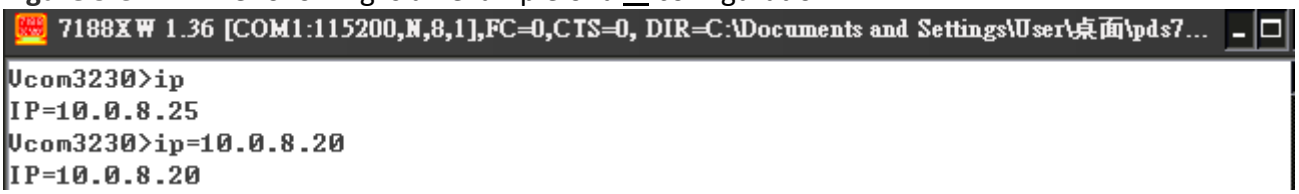

9.3.12 MASK

This command is used to query or set the subnet Mask value.

Effect: After the next reboot.

Command	Arguments	Description
MASK		Queries the subnet Mask value.
MASK	= xxx.xxx.xxx.xxx	Sets the subnet Mask value.

Figure 6-3.12: The following is an example of a **MASK** configuration.

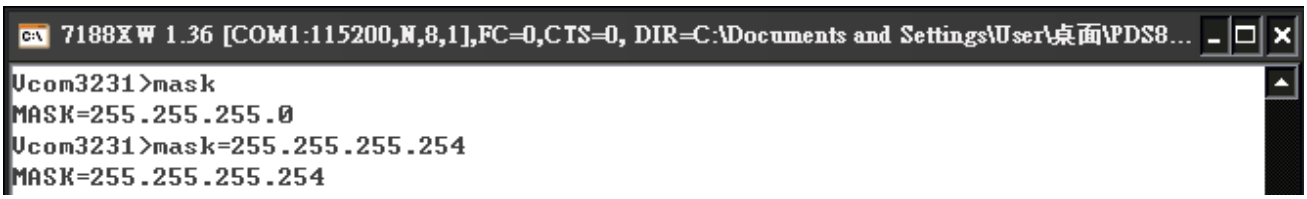

9.3.13 GATEWAY

This command is used to query or set the outgoing Gateway address of the subnet.

Effect: After the next reboot.

Command	Arguments	Description
Gateway		Queries the subnet Gateway value.
Gateway	= xxx.xxx.xxx.xxx	Sets the subnet Gateway value.

Figure 9-3.13: The following is an example of a **Gateway** configuration.

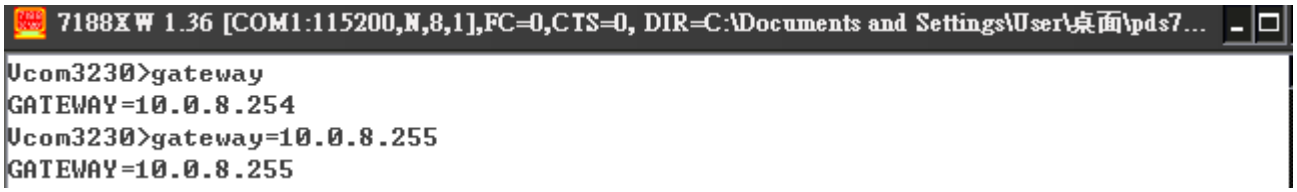

9.3.14 MAC

This command is used to query the MAC address.

Effect: Setting the address is not allowed.

Command	Arguments	Description
MAC		Queries the MAC address.(Setting the address is not allowed)

Figure 9-3.14: The following is an example of a **MAC** configuration.

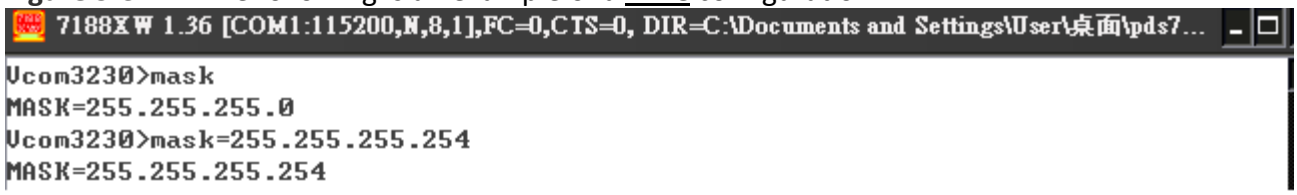

9.3.15 NAME

This command is used to query the name of a PDS.

Effect: Setting the address is not allowed.

Command	Arguments	Description
NAME		Queries the name of a PDS.

Figure 9-3.15: The following is an example of a **NAME** configuration.

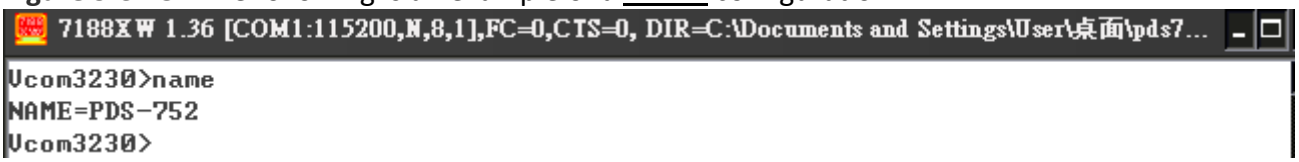

9.3.16 ALIAS

This command is used to query or set the alias of a PDS. The maximum character length of PDS alias name is 16 bytes.

Effect: Immediate

Command	Arguments	Description
alias		Queries the alias.
alias	= xxxx	Sets the alias of a PDS to “xxxx”.

Figure 9-3.16: The following is an example of a **alias** configuration.

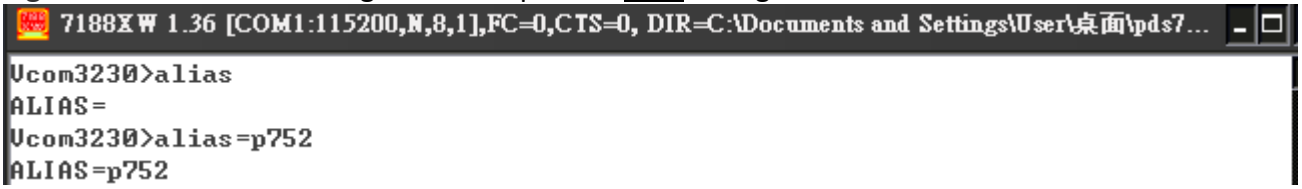

9.3.17 DHCP

This command is used to set the DHCP client to either enabled or disabled.

DHCP function will get a dynamic IP address setting for PDS automatically. Thus it's recommended to disable DHCP function and use a static IP address setting. This prevents you to configure virtual COM mappings again and again.

Effect: Immediate

Command	Arguments	Description
DHCP	= 0	Disables the DHCP client.
DHCP	= 1	Enables the DHCP client.

Figure 9-3.17: The following is an example of a **DHCP** configuration.

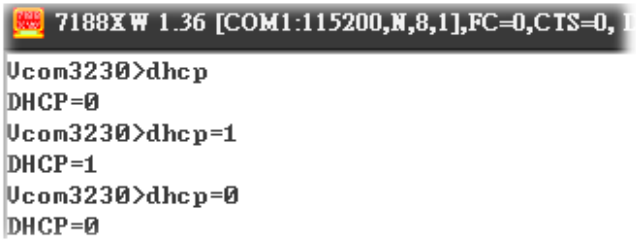

9.3.18 UDP

This command is used to configure the UDP Search function.

UDP is used to set the action mode for when a PDS receives a UDP search command.

Effect: Immediate

Command	Arguments	Description
UDP	= 0	Rejects UDP search commands. The PDS will not reply to the UDP search command, and can not be searched again.
UDP	= 1	Replies to UDP search commands. The PDS controller will reply to the UDP search command, and can be searched.
UDP	= 2	Replies to UDP search commands till a client is connected.

Figure 9-3.18: The following is an example of a **UDP** configuration.

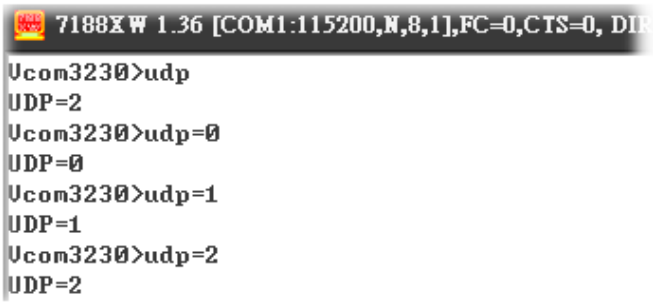

9.3.19 VER

This command is used to query the version information for a PDS.

Effect: Setting the version information is not allowed.

Command	Arguments	Description
VER		Queries the version information.

Figure 9-3.19: The following is an example of a **VER** configuration.

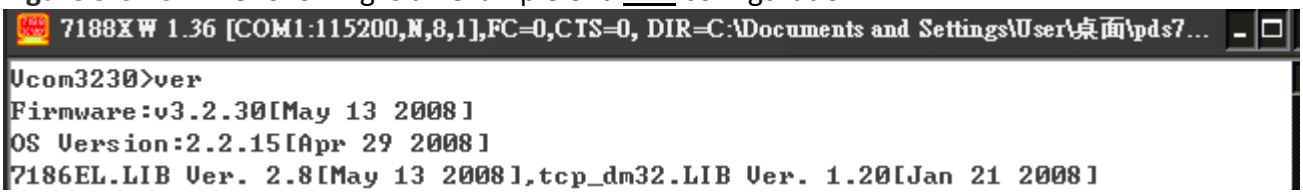

9.3.20 SAVE

This command is used to set the PDS to backup or no-backup **"autoexec.bat"** and **"vcom.ini"** files when using "load" command.

Effect: Immediate

Command	Arguments	Description
save	= 1	When the "load" command is used, backup copies of the "autoexec.bat" and "vcom.ini" files will be saved.
save	= 0 (Default)	When the "load" command is used, backup copies of the "autoexec.bat" and "vcom.ini" files will NOT be saved.

Refer to Figures 9-3.20 and 9-3.21 for detail illustrations.

9.3.21 LOAD

This command is used to loads file to the built-in flash disk on PDS. It should be used to update firmware only.

Effect: Immediate

Command	Arguments	Description
load		The command is coordinated with the MiniOS7 “load” command and can be used to renew the “vcom3230.exe,” “vcom.ini” or “autoexec.bat” file(s).

※ “Load” is not a Telnet command.

Figure 9-3.20: The following is an example of a **Save = 0** configuration.

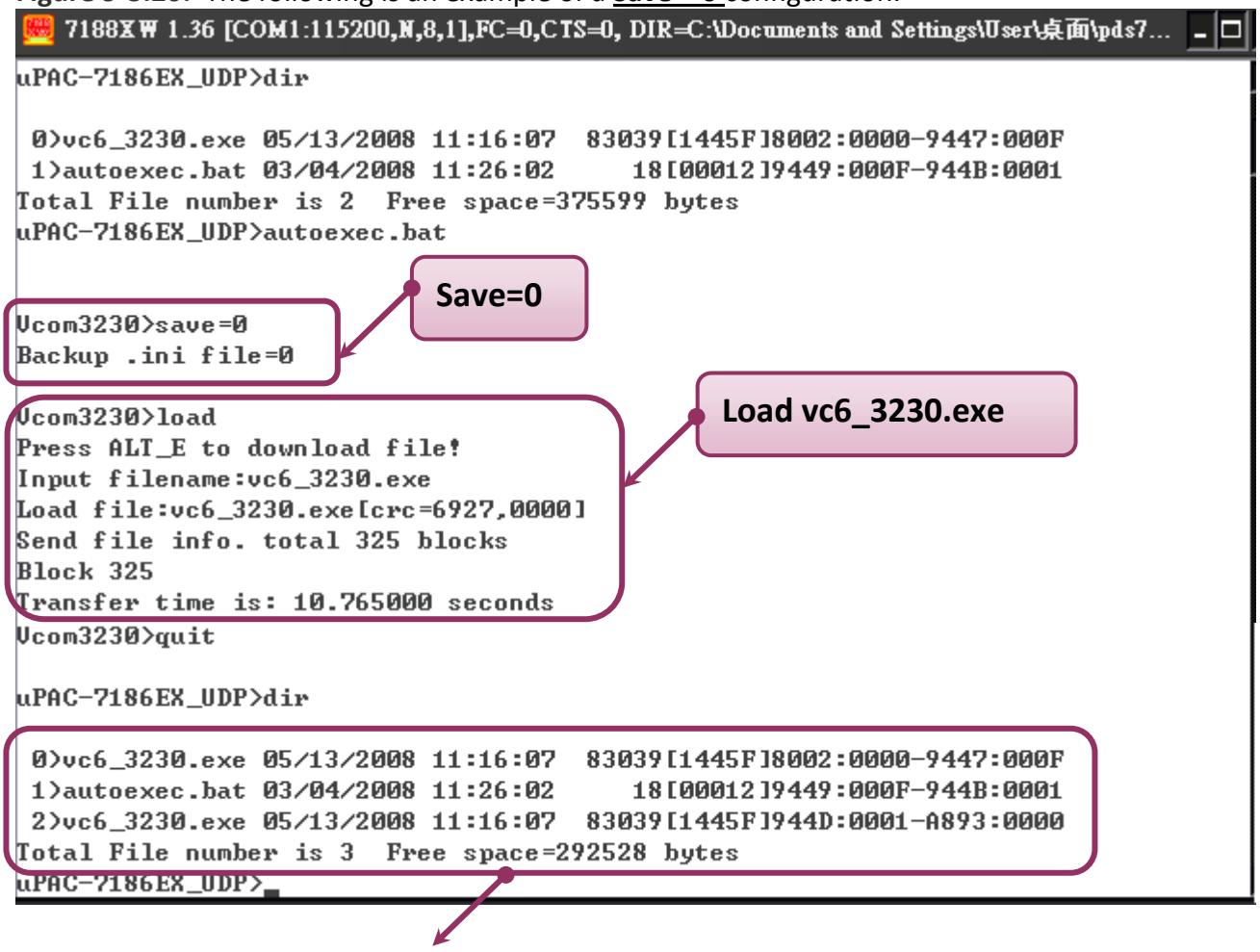

※When save = 0, the system doesn’t back up the "autoexec.bat" and "vcom.ini" files to memory, and doesn’t clear the flash disk. It only loads the file that is selected specified.

Figure 9-3.21: The following is an example of a **Save = 1** configuration.

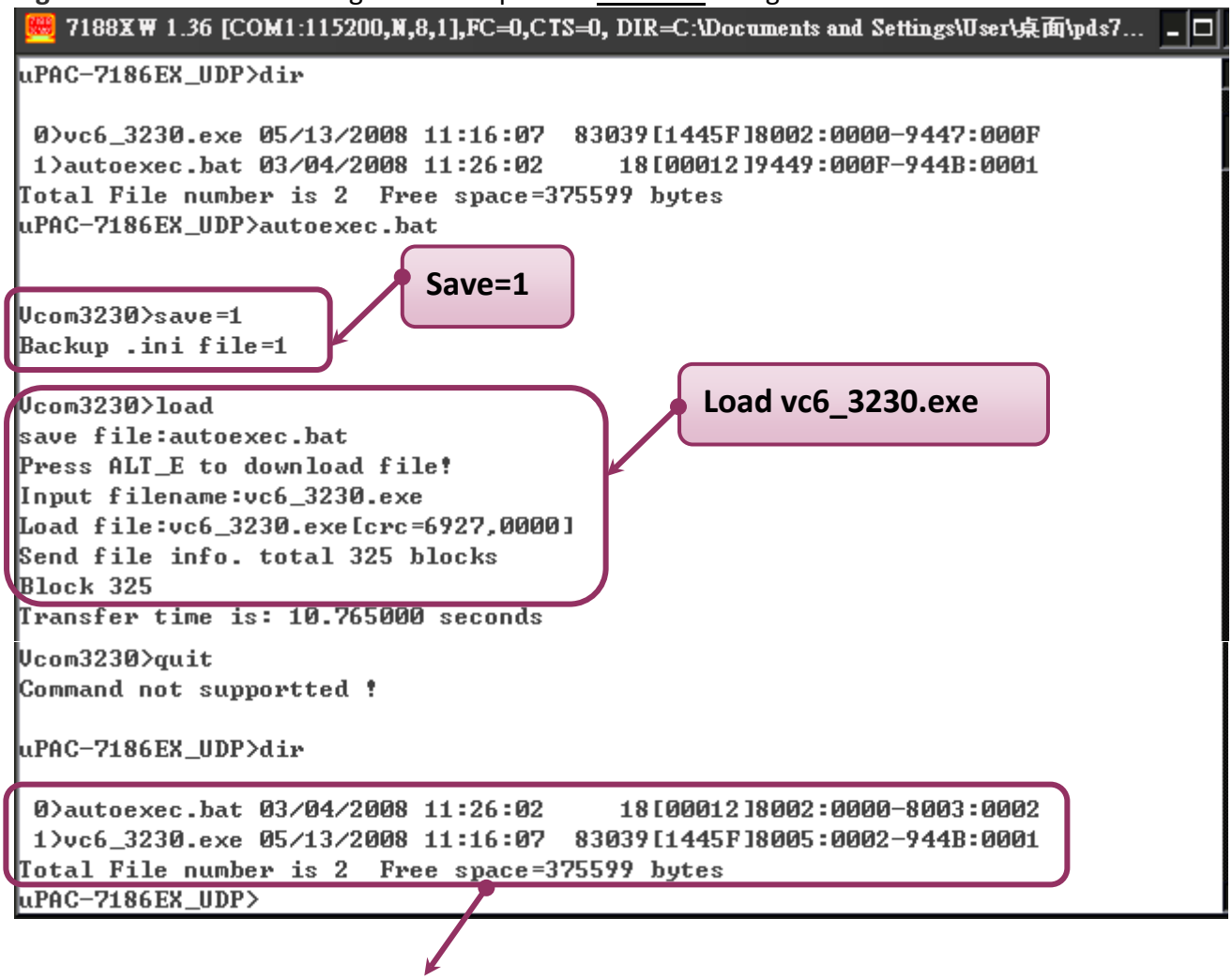

※ **When save = 1, system will back up the "autoexec.bat" and "vcom.ini" files to memory first, clear all files in the flash disk, and then load the "autoexec.bat" and "vcom.ini" files from memory and run the "load" command to load the specified file(s).**

9.3.22 CONFIG

This command is used to clear the settings in the EEPROM.

Effect: Immediate

Command	Arguments	Description
config	= RESET	Clears the settings in the EEPROM. After reboot, the firmware will use the new (default) settings on EEPROM. **Note: "RESET" MUST be in capital letters.**

※When "Config=RESET" is used, the Password, Alias and IPFILTER settings will also be cleared, but the IP/MASK/GATEWAY addresses will not.

※The SystemTimeout setting is also cleared to 0 by the "config=RESET" command, you have to configure the SystemTimeout value again. The default factory setting of SystemTimeout value should be 300000 ms (= 300 seconds).

Figure 9-3.22: The following is an example of a **CONFIG** configuration.

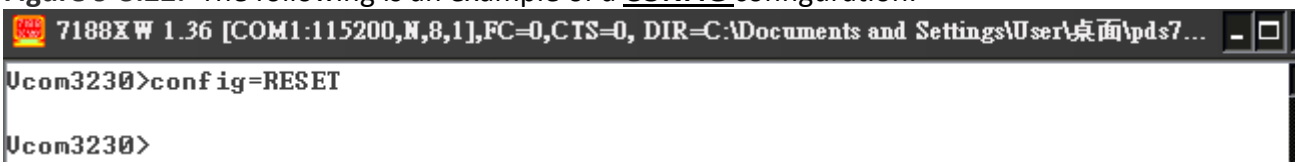

9.3.23 RESET

This command is used to reboot the PDS.

Effect: Immediate

Command	Arguments	Description
reset		Reboot the PDS.

Figure 9-3.23: The following is an example of a **RESET** configuration.



9.3.24 QUIT

This command is used to stop and quit the firmware of PDS.

Effect: Immediate

Command	Arguments	Description
quit		Quits the firmware.

Figure 9-3.24: The following is an example of a **Quit** configuration.

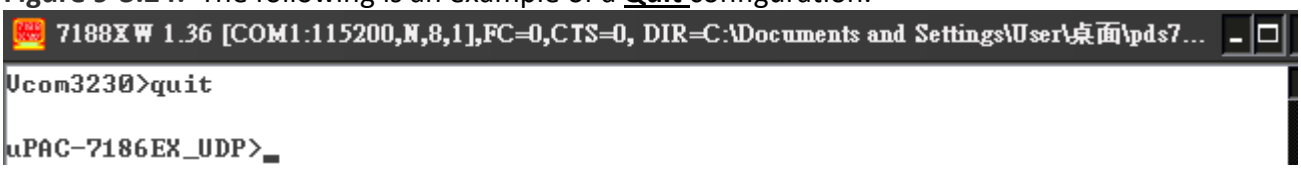

10. Modbus Information

What is Modbus TCP/IP?

Modbus is a communication protocol developed by Modicon in 1979. You can also visit http://www.modbus.org to find more valuable information.

The Different versions of Modbus used today include Modbus RTU (based on serial communication interfaces such as RS485 and RS232), Modbus ASCII and Modbus TCP, which is the Modbus RTU protocol embedded into TCP packets.

Modbus TCP is an internet protocol. The protocol embeds a Modbus frame into a TCP frame so that a connection oriented approach is obtained, thereby making it reliable. The master queries the slave and the slave responds with the reply. The protocol is open and, hence, highly scalable.

10.1 Modbus Message Structure

Modbus devices communicate using a master-slave (client-server) technique in which only one device (the master/client) can initiate transactions (called queries). The other devices (slaves/servers) respond by supplying the requested data to the master, or by taking the action requested in the query.

A query from a master will consist of a slave address (or broadcast address), a function code defining the requested action, any required data, and an error checking field. A response from a slave consists of fields confirming the action taken, any data to be returned, and an error checking field.

Modbus/TCP Message Structure

Byte 00~05	Byte 06~11
6-byte header	RTU Data

Leading 6 bytes of Modbus/TCP protocol:

Byte 00	Byte 01	Byte 02	Byte 03	Byte 04	Byte 05
Transaction identifier		Protocol identifier		Length field (upper byte)	Length field (lower byte)

Transaction identifier: Assigned by Modbus/TCP master (client)
Protocol identifier: 0
Length field (upper byte): 0 (since all messages are smaller than 256)
Length field (lower byte): Number of following RTU data bytes

RTU Data Structure

Byte 06	Byte 07	Byte 08-09	Byte 10-11
Net ID (Station number)	Function Code	Data Field	
		Reference number (Address Mapping)	Number of points

- **Net ID:** specifies the address of the receiver (Modbus/TCP slave).

The first byte in the Modbus structure of the Modbus RTU is the receiver's address. The Valid addresses are in the range of 0 to 247. Addresses 0 is used for broadcast, while addresses 1 to 247 are given to individual Modbus devices.

The Net ID should be assigned to the address for the target device you want to read from and write to. For example, if you want to use the built-in I/O of the PPDS, assign the Net ID to the PPDS's ID; if the PPDS is used as a Modbus/TCP to Modbus/RTU gateway, assign the Net ID to the address for the RTU slave device.

➢ **Function Code:** specifies the message type.

The second byte in the frame structure of the Modbus RTU is the function code. The function code describes what the slave is required to do. Valid function codes are between 1 and 255. The slave uses the same function code as the request to answer it. Only when an error occurs in the system will the highest bit of the function code be set to '1'. Hence the master will know whether the message has been transmitted correctly or not.

Section	Code	Function	Reference (Address)
10.1.1	**01 (0x01)**	Read Coils status (Readback DOs)	0xxxx
10.1.2	**02 (0x02)**	Read Input Status (Read DIs)	1xxxx
10.1.3	**05 (0x05)**	Force Single Coil (Write DO)	0xxxx
10.1.4	**15 (0x0F)**	Force Multiple Coils (Write DOs)	0xxxx

➢ **Data Field:** is the data block.

Data is transmitted in 8-, 16- and 32-bit format. The data of 16-bit registers is transmitted in high-byte first (For example: 0x0A0B ==> 0x0A, 0x0B). The data of 32-bit registers is transmitted as two 16-bit registers, and is low-word first. (For example: 0x0A0B0C0D ==> 0x0C, 0x0D, 0x0A, 0x0B.)

The data field of messages sent between a master and a slave contains additional information about the action to be taken by the master or any information requested by the slave. If the master does not require this information, the data field can be empty.

Reference (Address)	Description
0xxxx	Read/Write Discrete Outputs or Coils. A 0x reference address is used to output device data to a digital output channel.
1xxxx	Read Discrete Inputs. The ON/OFF status of a 1x reference address is controlled by the corresponding digital input channel.

For more detail of Address Mapping (Reference number), refer to Section 10.2 "Modbus Register Map".

01 (0x01) Read Coils Status (Readback DOs)

This function code is used to read the current coils status or the current digital output readback value.

[Request]

Byte	Description	Size	Value
00	Net ID (Station number)	1 Byte	1 ~ 247
01	Function code	1 Byte	0x01
02-03	Starting DO address	2 Bytes	Refer to Modbus Address Table for PPDS series. (Section 10.2 Modbus Register Map) Byte 02 = high byte Byte 03 = low byte
04-05	Number of points (channels)	2 Bytes	Byte 04 = high byte Byte 05 = low byte

[Response]

Byte	Description	Size	Value
00	Net ID (Station number)	1 Byte	1 ~ 247
01	Function code	1 Byte	0x01
02	Byte Count	1 Byte	Byte count of response (n = (Points+7)/8)
03	Data	n Byte	n= 1; Byte 03 = data bit 7~0 n= 2; Byte 04 = data bit 15~8 ..... n= m; Byte m+2 = data bit (8m-1)~ 8(m-1)

[Error Response]

Byte	Description	Size	Value
00	Net ID (Station number)	1 Byte	1 ~ 247
01	Function code	1 Byte	0x81
02	Exception code	1 Byte	Refer to Modbus Standard Specification for more details

For example: Function 01 (0x01), Readback DOs

Reads digital output value of PPDS-721D-MTCP:		
	[Leading 6 bytes]	[Request]
Command:	01 02 00 00 00 06	01 01 00 00 00 07
	[Leading 6 bytes]	[Response]
Response:	01 02 00 00 00 04	01 01 01 04

Descriptions as follows:

Command:		
[Leading 6 bytes]	Byte 00-03:	01 02 00 00 (Message number)
	Byte 04-05:	00 06 (Number of remaining bytes in this frame)
[Request]	Byte 00:	01 (Net ID)
	Byte 01:	01 (Function Code)
	Byte 02-03:	00 00 (Starting DO address)
	Byte 04-05:	00 07 (Number of points)

Response:		
[Leading 6 bytes]	Byte 00-03:	01 02 00 00 (Message number)
	Byte 04-05:	00 04 (Number of remaining bytes in this frame)
[Response]	Byte 00:	01 (Net ID)
	Byte 01:	01 (Function Code)
	Byte 02:	01 (Byte count of response)
	Byte 04:	04 (DO6~DO0 Value)

02 (0x02) Read Input Status (Read DIs)

This function code is used to read the current digital input value.

[Request]

Byte	Description	Size	Value
00	Net ID (Station number)	1 Byte	1 ~ 247
01	Function code	1 Byte	0x02
02-03	Starting DI address	2 Bytes	Refer to Modbus Address table for PPDS series. (Section 10.2 Modbus Register Map) Byte 02 = high byte Byte 03 = low byte
04-05	Number of points (channels)	2 Bytes	Byte 04 = high byte Byte 05 = low byte

[Response]

Byte	Description	Size	Value
00	Net ID (Station number)	1 Byte	1 ~ 247
01	Function code	1 Byte	0x02
02	Byte Count	1 Byte	Byte count of response (n =(Points+7)/8)
03	Data	n Byte	n= 1; Byte 03 = data bit 7~0 n= 2; Byte 04 = data bit 15~8 ..... n= m; Byte m+2 = data bit (8m-1)~ 8(m-1)

[Error Response]

Byte	Description	Size	Value
00	Net ID (Station number)	1 Byte	1 ~ 247
01	Function code	1 Byte	0x82
02	Exception code	1 Byte	Refer to Modbus Standard Specification for more details

For example: Function 02 (0x02), Read DIs

Reads digital input value of PPDS-721D-MTCP:		
	[Leading 6 bytes]	[Request]
Command:	01 02 00 00 00 06	01 02 00 00 00 06
	[Leading 6 bytes]	[Response]
Response:	01 02 00 00 00 04	01 02 01 3B

Descriptions as follows:

Command:		
[Leading 6 bytes]	Byte 00-03:	01 02 00 00 (Message number)
	Byte 04-05:	00 06 (Number of remaining bytes in this frame)
[Request]	Byte 00:	01 (Net ID)
	Byte 01:	02 (Function Code)
	Byte 02-03:	00 00 (Starting DI address)
	Byte 04-05:	00 06 (Number of points)

Response:		
[Leading 6 bytes]	Byte 00-03:	01 02 00 00 (Message number)
	Byte 04-05:	00 04 (Number of remaining bytes in this frame)
[Response]	Byte 00:	01 (Net ID)
	Byte 01:	02 (Function Code)
	Byte 02:	01 (Byte count of response)
	Byte 04:	3B (DI5~DI0 Value)

05 (0x05) Force Single Coil (Write DO)

This function code is used to set a single coil status or a single digital output value.

[Request]

Byte	Description	Size	Value
00	Net ID (Station number)	1 Byte	1 ~ 247
01	Function code	1 Byte	0x05
02-03	DO Address	2 Bytes	Refer to Modbus Address Table for PPDS series. (Section 10.2 Modbus Register Map) Byte 02 = high byte Byte 03 = low byte
04-05	Output value	2 Bytes	0xFF 00 set the output to ON. 0x00 00 set the output to OFF. All other values are illegal and will not affect the coil. Byte 04 = high byte Byte 05 = low byte

[Response]

Byte	Description	Size	Value
00	Net ID (Station number)	1 Byte	1 ~ 247
01	Function code	1 Byte	0x05
02-03	DO Address	2 Bytes	The value is the same as Byte 02-03 of the Request
04-05	Output value	2 Bytes	The value is the same as Byte 04-05 of the Request

[Error Response]

Byte	Description	Size	Value
00	Net ID (Station number)	1 Byte	1 ~ 247
01	Function code	1 Byte	0x85
02	Exception code	1 Byte	Refer to Modbus Standard Specification for more details

For example: function 05 (0x05), Write DO

Sets the DO2 to ON of PPDS-721D-MTCP		
	[Leading 6 bytes]	[Request]
Command:	01 02 00 00 00 06	01 05 00 02 FF 00
	[Leading 6 bytes]	[Response]
Response:	01 02 00 00 00 06	01 05 00 02 FF 00

Descriptions as follows:

Command:		
[Leading 6 bytes]	**Byte 00-03:**	01 02 00 00 (Message number)
	Byte 04-05:	00 06 (Number of remaining bytes in this frame)
[Request]	**Byte 00:**	01 (Net ID)
	Byte 01:	05 (Function Code)
	Byte 02-03:	00 02 (DO address)
	Byte 04-05:	FF 00 (Set the output to ON)

Response:		
[Leading 6 bytes]	**Byte 00-03:**	01 02 00 00 (Message number)
	Byte 04-05:	00 06 (Number of remaining bytes in this frame)
[Response]	**Byte 00:**	01 (Net ID)
	Byte 01:	05 (Function Code)
	Byte 02-03:	00 02 (DO address)
	Byte 04-05:	FF 00 (Set the output to ON)

15 (0x0F) Force Multiple Coil (Write DOs)

This function code is used to set multiple coils status or write multiple digital output value.

[Request]

Byte	Description	Size	Value
00	Net ID (Station number)	1 Byte	1 ~ 247
01	Function code	1 Byte	0x0F
02-03	Starting DO address	2 Bytes	Refer to Modbus Address Table for PPDS series. (Section 10.2 Modbus Register Map) Byte 02 = high byte Byte 03 = low byte
04-05	Number of output channels (Points)	2 Bytes	Byte 04 = high byte Byte 05 = low byte
06	Byte count	1 Byte	n = (Points +7)/8
07	Output value	n Byte	A bit corresponds to a channel. Value 1 for a bit denotes the channel is ON, while the value 0 is OFF. n= 1; Byte 07 = data bit 7 ~ 0 n= 2; Byte 08 = data bit 15 ~ 8 ..... n= m; Byte m+6 = data bit (8m-1)~ 8(m-1)

[Response]

Byte	Description	Size	Value
00	Net ID (Station number)	1 Byte	1 ~ 247
01	Function code	1 Byte	0x0F
02-03	Starting DO address	2 Bytes	The value is the same as Byte 02-03 of the Request
04-05	Number of output channels (Points)	2 Bytes	The value is the same as Byte 04-05 of the Request

[Error Response]

Byte	Description	Size	Value
00	Net ID (Station number)	1 Byte	1 ~ 247
01	Function code	1 Byte	0x8F
02	Exception code	1 Byte	Refer to Modbus Standard Specification for more details

For example: function 0F (0x0F), Write DOs

Sets DO0 ~ DO6 to NO of PPDS-721D-MTCP		
	[Leading 6 bytes]	[Request]
Command:	01 02 00 00 00 08	01 0F 00 00 00 07 01 7F
	[Leading 6 bytes]	[Response]
Response:	01 02 00 00 00 06	01 0F 00 00 00 07

Descriptions as follows:

Command:		
[Leading 6 bytes]	**Byte 00-03:**	01 02 00 00 (Message number)
	Byte 04-05:	00 08 (Number of remaining bytes in this frame)
[Request]	**Byte 00:**	01 (Net ID)
	Byte 01:	0F (Function Code)
	Byte 02-03:	00 00 (Starting DO address)
	Byte 04-05:	00 07 (Number of output channels)
	Byte 06:	01 (Byte count)
	Byte 07:	7F (Output value)

Response:		
[Leading 6 bytes]	**Byte 00-03:**	01 02 00 00 (Message number)
	Byte 04-05:	00 06 (Number of remaining bytes in this frame)
[Response]	**Byte 00:**	01 (Net ID)
	Byte 01:	0F (Function Code)
	Byte 02-03:	00 00 (Starting DO address)
	Byte 04-05:	00 07 (Number of output channels)

10.2 Modbus Message Map

The nDI and nDO parameters of each model used in the following Modbus address tables are shown as follows:

Model name	Number of DO channels **(nDO)**	Number of DI channels **(nDI)**
PDS(M)-721(D), PPDS(M)-721(D)-MTCP	7	6
PDS(M)-732(D), PPDS(M)-732(D)-MTCP	4	4
PDS(M)-734(D), PPDS(M)-734(D)-MTCP	4	4
PDS(M)-743(D), PPDS(M)-743(D)-MTCP	4	4
PDS(M)-762(D), PPDS(M)-762(D)-MTCP	2	1

➢ **0xxxx: DO address (base 0)**

Begin address		Points	Description	Range	Access Type	Factory Set Value
DEC	0~(nDO-1)	1~nDO	Digital Output Value	0 = Off 1 = On	R/W	-
HEX	0x00~0x(nDO-1)					
"**R**": Read; "**W**": Write						

➢ **1xxxx: DI address (base 1)**

Begin address		Points	Description	Range	Access Type
DEC	0 ~ (nDI-1)	1~nDI	Digital Input Value	0 = Off 1 = On	R
HEX	0x00 ~ 0x(nDI-1)				
"**R**": Read					

Appendix A: Linking to a Development PC

Step 1: Connect the download-cable (CA0910), between the PDS and COM 1 of the development PC.

1-1: Connect the connector of CA-0910 download cable to your host computer.

1-2: Wire the CA-0910 to PDS, as follows:

Connect the CA-0910.TX with PDS.TxD

Connect the CA-0910.RX with PDS.RxD

Connect the CA-0910.GND with PDS.GND

Step 2: Connect the **INIT* pin to the GND pin**.

Step 3: Apply power (+Vs, GND) to the PDS series module.

Supply **24 V_{DC} (+10 ~ +30 V_{DC}) power** to the PDS(M)-700 Series.

Supply **24 V_{DC} (+12 ~ +48 V_{DC}) power** to the PPDS(M)-700-MTCP, DS-700, PPDS-700-IP67, PDS-782-25 and PDS-5105D-MTCP Series.

Refer to below illustration for how to perform the above procedure.

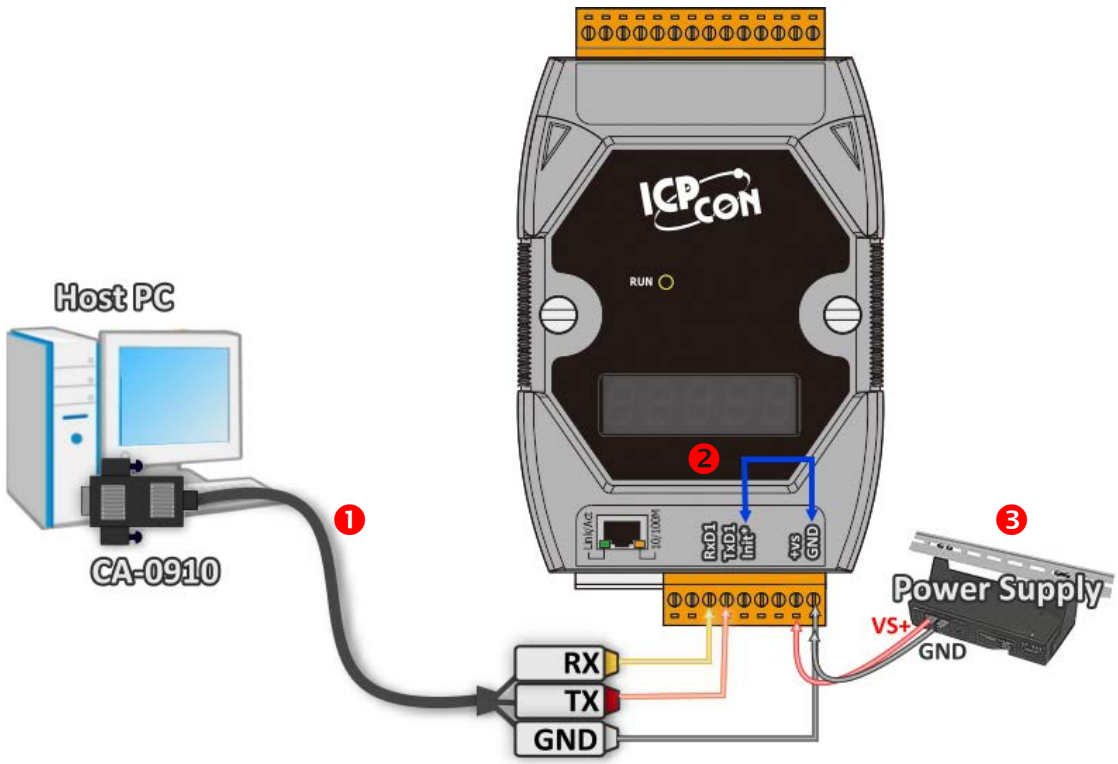

Step 4: Verify that the System LED indicator is flashing on the PDS. If your PDS series module is a **D-version module**, the 5-digit 7-SEG LED will be used to indicate the system information described in Section 2.8 "PDS Series Diagnostics (LED Indicator)".

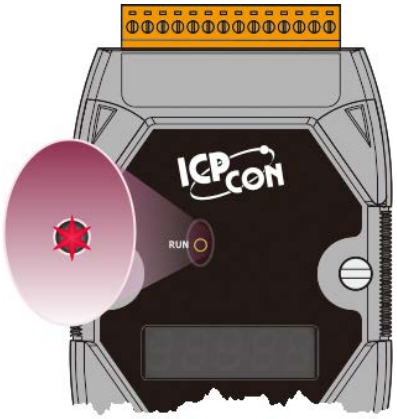

Step 5: Unzip the **"7188XW_+yyyymmdd.zip"** file on the PC.

The **"7188XW_yyyymmdd.zip"**can be obtained from the ICP DAS web site. The location of the download addresses are shown below:

http://ftp.icpdas.com/pub/cd/8000cd/napdos/minios7/utility/

Step 6: Execute 7188XW.EXE/C#, and change the Baud Rate to 115200 bps, N81. "/C#" is the COM Port of the development PC.

Step 7: Press [↵ Enter] twice on the development PC.

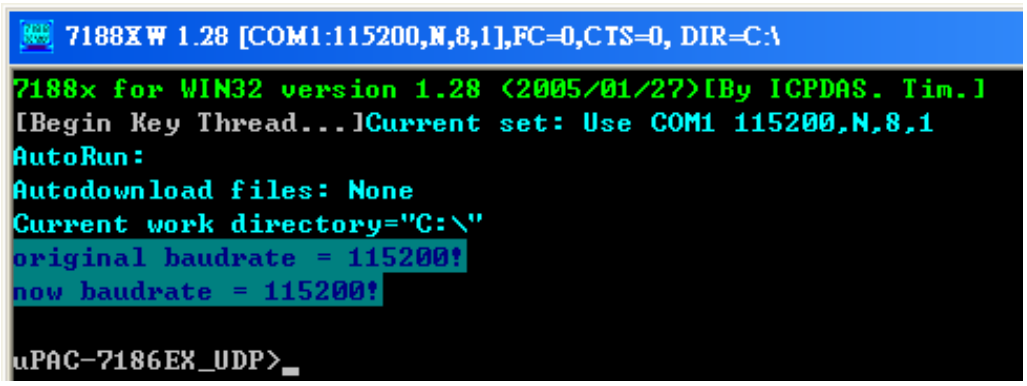

Step 8: Read the configuration of the PDS (The following is a default value).

```
uPAC-7186EX_UDP>ip
IP=10.0.8.20
uPAC-7186EX_UDP>mask
MASK=255.255.255.0
uPAC-7186EX_UDP>gateway
Gateway=10.0.8.254
uPAC-7186EX_UDP>mac
Ethernet Address = 00:0d:e0:20:00:07
uPAC-7186EX_UDP>setcom 1
Current set is: 9600,8,0,1
```

Read configuration command

- Ip
- Mask
- Gateway
- Mac
- setcom port

Step 9: The configuration of the PDS as follows can be changed.

Please setting for with your PC same network region **IP/Mask/Gateway addresses**.
This example: **10.0.8.246/255.255.255.0/10.0.8.255**

```
uPAC-7186EX_UDP>ip 192.168.41.1
Set IP=192.168.41.1
[ReadBack]IP=192.168.41.1
uPAC-7186EX_UDP>mask 255.255.255.0
Set MASK=255.255.255.0
[ReadBack]MASK=255.255.255.0
uPAC-7186EX_UDP>gateway 192.168.41.4
Set GATEWAY=192.168.41.4
[ReadBack]Gateway=192.168.41.4
uPAC-7186EX_UDP>setcom 1 115200,n,8,1
Current set is: 9600,8,0,1
Set to: 115200,8,0,1 [checksum:CC]
```

Settings configuration command

- ip [new ip]
- mask [new mask]
- gateway [new gateway]
- mac [new mac]
- setcom port (refer to Table A-1)
- [baud][data_bit][parity][stop_bit]

Table A-1: **"setcom"** parameters are as follows.

Port	1	
Baud Rate	2 ~ 921600	
Data Bit	7, 8: for COM 1~2	5,6,7,8: for COM 3 ~ 8
Parity	N, n : None parity E, e : Even parity O, o : Odd parity	M, m: Mark, parity = 1 S, s: Space, parity = 0
Stop Bit	1: for COM 1~2	1, 2: for COM 3~8

Step 10: Disconnect the INIT* pin from the GND pin.

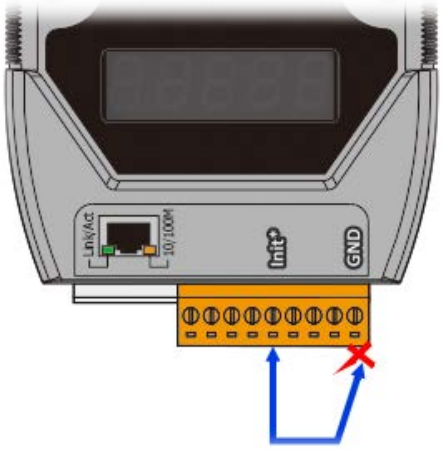

Step 11: Execute ping you setting IP (e.g., ping 10.0.8.246 –t) using a run command.

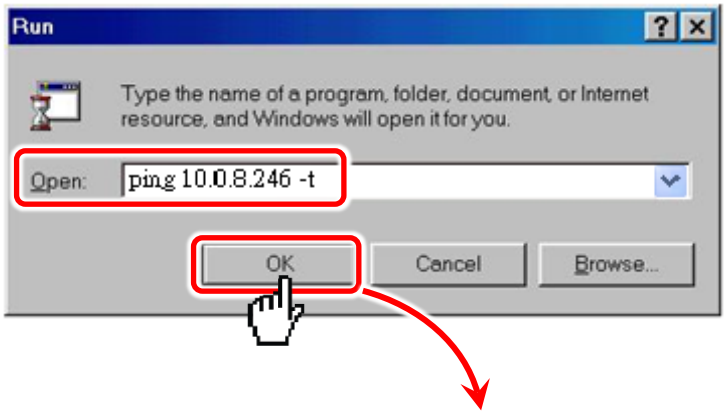


```
Pinging 10.0.8.246 with 32 bytes of data:

Reply from 10.0.8.246: bytes=32 time=1ms TTL=64
Reply from 10.0.8.246: bytes=32 time<1ms TTL=64
Reply from 10.0.8.246: bytes=32 time<1ms TTL=64
Reply from 10.0.8.246: bytes=32 time<1ms TTL=64
Reply from 10.0.8.246: bytes=32 time<1ms TTL=64
Reply from 10.0.8.246: bytes=32 time<1ms TTL=64
Reply from 10.0.8.246: bytes=32 time<1ms TTL=64
Reply from 10.0.8.246: bytes=32 time<1ms TTL=64
Reply from 10.0.8.246: bytes=32 time<1ms TTL=64
Reply from 10.0.8.246: bytes=32 time<1ms TTL=64
```

Follow the procedure described below:

1. Click the "**Start**" button and then click **"Run"** to open the "**Run Command**" dialog box.
2. In the **"Run Command"** dialog box, type **"pin 10.0.8.246 -t"** in the **"Open:"** field.
3. Click the **"OK"** button to open a Command Prompt window.
4. The ping results should be smooth and continuous

Notes:

1. 192.168.255.1 is the default IP of the PDS. The IP address can be changed using the instructions in step 8.

2. If the PDS cannot be successfully pinged from the PC, refer to step 8 to change the configuration of the PDS. (The mask and gateway addresses of PDS controller and the PC should make the network definition.)

3. The MAC address of the PDS should be unique on the same network. Refer to step 8 for details of how to change the MAC address of the PDS.

4. Each PDS MAC address is unique in the default shipping.

In general, if the host PC can ping the PDS smoothly and continuously, all other software and drivers for the PDS will operate correctly. Therefore, users should ensure that the development PC is able to ping the PDS smoothly before any further testing is carried out.

Appendix B: Frame Ground

Electronic circuits are constantly vulnerable to Electro Static Discharge (ESD), which becomes worse in a continental climate area. PDS series modules feature a new design for the frame ground, which provides a path for bypassing ESD, allowing enhanced static protection (ESD) capability and ensures that the module is more reliable.

It is recommended that the Frame Ground of the PDS series module is corrected to the earth ground, such as the ground of an AC power supply, to provide better ESD protection for the module.

The PDS-700, PPDS-700-MTCP, DS-700 module is designed with two Frame Ground contact points, Frame-Ground-A and Frame-Ground-B, as shown in the figure below. When mounted to a DIN rail, Frame-Ground-B and the DIN rail are in contact. Thus, protection can be achieved by also connecting the DIN rail to earth ground.

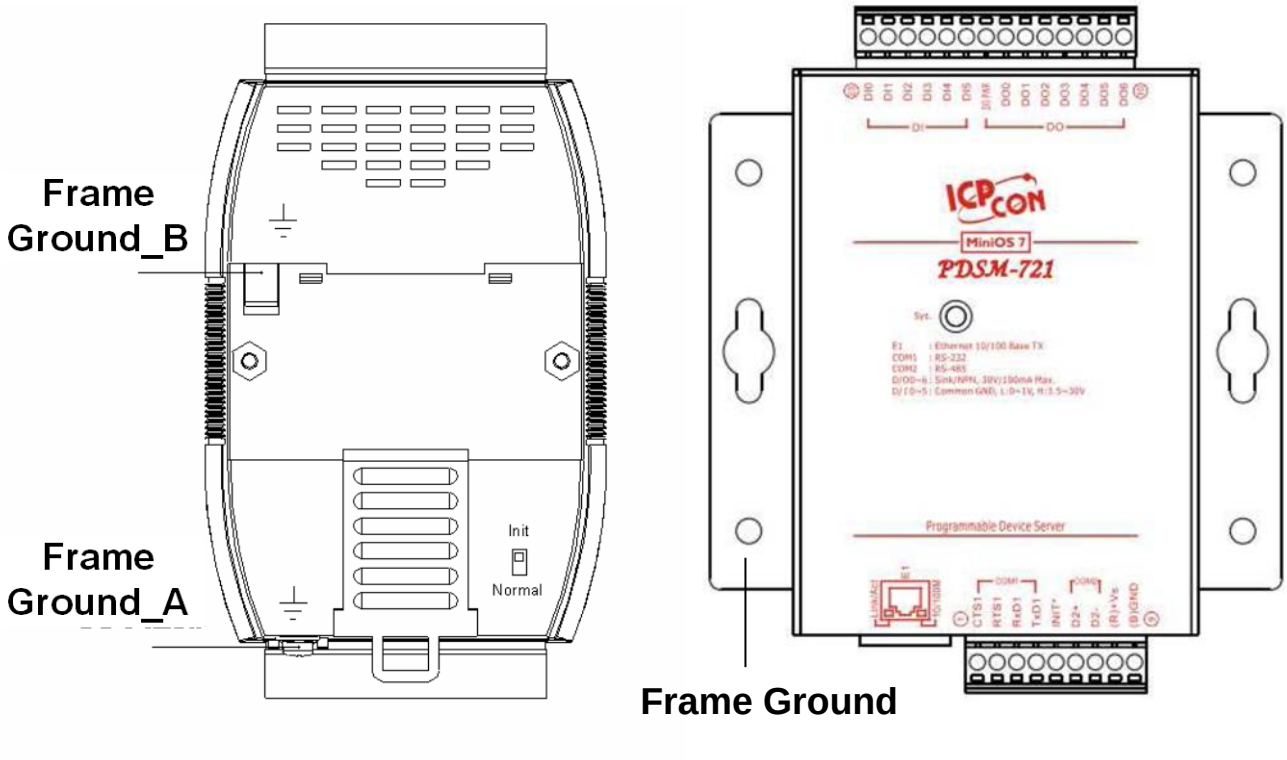

Appendix C: Glossary

1. ARP (Address Resolution Protocol)

The Address Resolution Protocol (ARP) is a telecommunication protocol that is used to convert an IP address to a physical address, such as an Ethernet address.

Consider two machines A and B that share the same physical network. Each has an assigned IP address IP_A and IP_B, and a MAC address, MAC_A and MAC_B. The goal is to devise a low-level software application that hides the MAC addresses and allows higher-level programs to work only with the IP addresses. Ultimately, however, communication must be carried out by the physical networks using whatever MAC address scheme the hardware supplies.

Suppose machine A wants to send a packet to machine B across a physical network to which they are both attached, but A only has the Internet address for B, IP_B. The question arises: how does A map that address to the MAC address for B, MAC_B?

ARP provides a method of dynamically mapping 32-bit IP address to the corresponding 48-bit MAC address. The term dynamic is used since the mapping is performed automatically and is normally not a concern for either the application user or the system administrator.

2. Clients and Servers

The client-server paradigm uses the direction of initiation to categorize whether a program is a client or server. In general, an application that initiates peer-to-peer communication is called a client. End users usually invoke client programs when they use network services.

By comparison, a server is any program that waits for incoming requests from a client program. The server receives a request from a client, performs the necessary actions and returns the result to the client.

3. Ethernet

The term Ethernet generally refers to a standard published in 1982 by Digital Equipment Corp., Intel Corp. and Xerox Corp. Ethernet is the most popular physical layer Local Area Network (LAN) technology in use today.

4. Firmware

Firmware is an embedded software program or set of instructions programmed on a device that provides the necessary instructions for how the device communicated with other computer hardware, and is located or stored in a semi-permanent storage area, e.g., ROM, EEPROM, or Flash memory. Firmware can often be updated by downloading a file from the manufacturer's web site or FTP.

5. Gateway

Computers that interconnect two networks and pass packets from one to the other are called Internet Gateways or Internet Routers. Gateways route packets that are based on the destination network, rather than the destination host.

6. ICMP (Internet Control Message Protocol)

ICMP provides a method of communicating between the Internet Protocol software on one machine and the corresponding software on another. It allows a gateway to send error or control messages to other gateways, or allows a host to diagnose problems with the network communication.

7. Internet

Physically, the Internet is a collection of packet switching networks interconnected by gateways that together with the TCP/IP protocol, allows them to perform logically as a single, large and virtual network. The Internet recognizes hosts using 32-bit IP address.

8. IP (Internet Protocol) Address

Each interface on the Internet must have a unique IP address (also called an Internet address). These addresses are 32-bit numbers, and are normally written as four decimal numbers, one for each byte of the address for example "192.168.41.1". This is called dotted-decimal notation.

9. MAC (Media Access Control) Address

To allow a computer to determine which packets are meant for it, each device attached to an Ethernet network is assigned a 48-bit integer known as its MAC address (also called the Ethernet address, the hardware address or the physical address). A MAC address is normally written as eight hexadecimal numbers, for example "**00:71:88:af:12:3e:0f:01**". Ethernet hardware manufacturers purchase blocks of MAC addresses and assign them in sequence as they manufacture Ethernet interface hardware. Thus, no two hardware interfaces can have the same MAC address.

10. Packet

A packet is the unit of data sent across a physical network. It consists of a series of bits containing data and control information, including the source and the destination node (host) address, and is formatted for transmission from one node to another.

11. Ping

Ping is a network administration utility used to test the whether a host on an Internet network is active, and to measure the round-trip time for messages sent from the originating host to a destination computer. Ping operates by sending an ICMP echo request message to a host, expecting an ICMP echo reply to be returned. Normally, if a host cannot be pinged, Telnet or FTP cannot be used to connect to the host. Conversely, if Telnet or FTP cannot be used to connect to a host, Ping is often the starting point to determine the nature of the problem.

12. RARP (Reverse Address Resolution Protocol)

RARP provides a method of dynamically mapping 48-bit MAC address to the corresponding 32-bit IP address. RARP has now been replaced by the Bootstrap Protocol (BOOTP) and the modern Dynamic Host Configuration Protocol (DHCP).

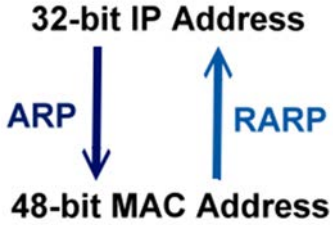

13. Socket

Each TCP segment contains a source and destination port number that can be used to identify the sending and receiving application. These two values, along with the source and destination IP addresses in the IP header, uniquely identify each connection. The combination of an IP address and a port number is called a socket.

14. Subnet Mask

A Subnet mask, often simply called the “Mask”, is a 32-bit number that masks and IP address, and divides the IP address into the network address and the host address. Given its own IP address and its subnet mask, a host can determine whether a TCP/IP packet is destined for a host that is (1) on its own subnet, or (2) on a different network. If (1), the packet will be delivered directly; otherwise it, will be delivered via a gateway or a router.

15. TCP (Transmission Control Protocol)

TCP is a set of rules used in combination with the Internet Protocol to send data in the form of message units between computers over the Internet. TCP provides a reliable flow of data between two hosts and is associated with tasks such as dividing the data passed to it from an application into appropriately sized chunks for the network layer below, acknowledging received packets, setting timeouts to make certain that the other end acknowledges packets that are sent, and so on.

16. TCP/IP

The Transmission Control Protocol (TCP) and the Internet Protocol (IP) are standard network protocols that are almost always implemented and used together in a formation is known as TCP/IP. TCP/IP can be used to communicate across any set of interconnected networks.

17. UDP (User Datagram Protocol)

UDP is an internet protocol that provides a much simpler service to the application layer as it only sends packets of data from one host to an other, but there is no guarantee that the packets will reach the destination host. UDP is suitable for purposes where error checking and correction is either not necessary or is performed in the application.

Appendix D: Revision History

This chapter provides revision history information to this document.

The table below shows the revision history.

Revision	Date	Function
1.0		Initial issue
2.2.2	Dec. 2014	Delete Appendix: FAQ
2.2.5	Nov. 2015	Delete the Modbus Utility and change the use Modbus TCP Master and Modbus RTU Master on the Vxcomm Utility to test Modbus function.
2.3	Dec. 2017	1. Modify the Section 2.11 Waterproofing Attachment Installation for IP67 Series. 2. Add the “ID offset” and “Data Buffer Trigger Level” parameters settings description. 4. Added Chapter Appendix D: Revision History.
2.4	Sep. 2018	Remove the package CD