# DeviceNet Series Products

## DeviceNet Slave / DCON Master Gateway



*I-7241D*

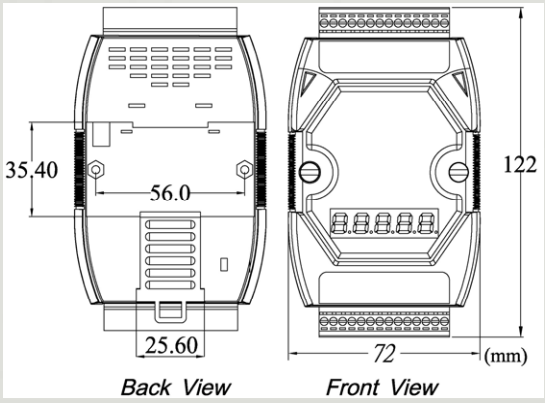


Dimensions

The I-7241D is one of CAN bus products in ICP DAS. The device offers the communication gateway between DeviceNet and DCON protocol. DCON protocol is the communication protocol of I-7K and I-87K series IO modules of ICP DAS. And the I-7241D can be a DeviceNet slave device in CAN bus for DeviceNet network. It is a "Group 2 Only Slave" device, and supports "Predefined Master/Slave Connection Set". In addition, we also provide the utility software for users to configure the device parameters and build EDS file for the DeviceNet slave device. Users can easily apply I-7K and I-87K IO modules in DeviceNet applications with the I-7241D.

## Features

- DeviceNet Version: Volume I & II, Release 2.0
- NMT: Slave
- Support Predefined Master/slave Connection Set
- Dynamic Assembly Objects Mapping
- Support Offline Connection Set, Device Heartbeat message and Device Shutdown message
- Provide Assembly object
- Dynamic Product EDS File
- I/O operating modes: Polling, Bit-Strobe, Change of State/Cyclic
- Support max 15 I-7K/I-87K IO modules
- Provide friendly Utility to configure
- Baud Rate: 125, 250, 500 kbps
- On-line change baud rate and MAC ID of CAN
- 7-segmemt LED to show operation mode, MAC ID, baud rate and error code

## Utility Features

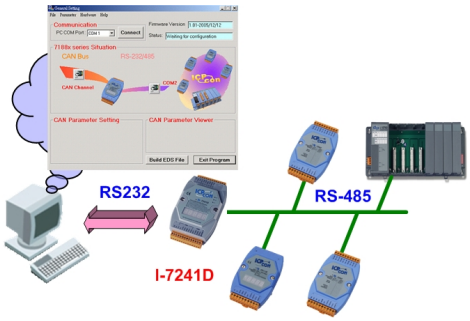


DCON (I-7K/I-87KSeries)

- Support auto-scan I-7K/I-87K modules
- Show Application and Assembly Objects configuration
- Support IO connection path setting
- Support EDS file creating

## Design Flowchart

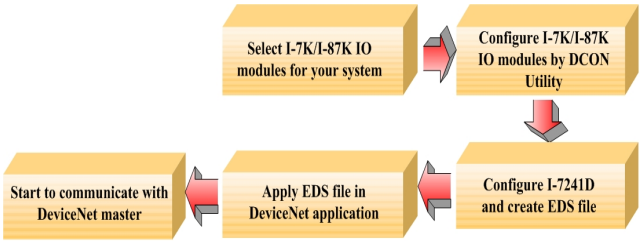


## Pin Assignments

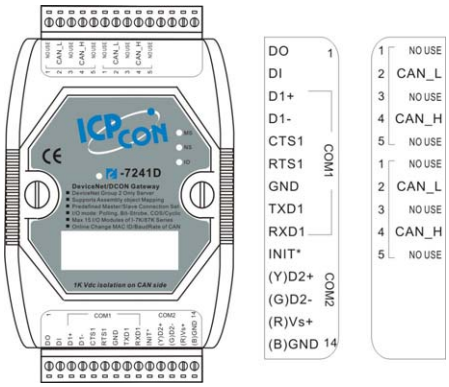

## Hardware Specifications

| Hardware | |
|---|---|
| CPU | 80188, 40 MHz or compatible |
| SRAM/Flash/EEPROM | 512 KB / 512 KB / 16 KB |
| Watchdog | Watchdog IC |
| **CAN Interface** | |
| Controller | NXP SJA1000T with 16 MHz clock |
| Transceiver | NXP 82C250 |
| Connector | 5-pin screwed terminal block (CAN_L, CAN_H, N/A for others) |
| Isolation | 1000 $V_{DC}$ for DC-to-DC, 2500 Vrms for photo-couple |
| Terminator Resistor | Jumper for 120 Ω terminator resistor |
| Protocol | DeviceNet Volume I ver2.0, Volume II ver2.0 |
| **UART Interface** | |
| COM 1 | RS-232 (For configuration) |
| COM 2 | RS-485 (Self-turner inside) |
| Transmission Distance (m) | Depend on baud rate (for example, max. 1200 m at 9.6 kbps ) |
| Baud Rate (bps) | 1200, 2400, 4800, 9600, 19200, 38400, 57600, 115200 |
| Protocol | DCON |
| **LED** | |
| Round LED | MS LED, NS LED, IO LED |
| 5-digit 7 Segment | Yes |
| **Power** | |
| Power supply | Unregulated +10 ~ +30 $V_{DC}$ |
| Protection | Power reverse polarity protection, Over-voltage brown-out protection |
| Power Consumption | 3W |
| **Mechanism** | |
| Dimensions | 72mm x 122mm x 33mm (W x L x H) |
| **Environment** | |
| Operating Temp. | -25 ~ 75 ℃ |
| Storage Temp. | -30 ~ 80 ℃ |
| Humidity | 10 ~ 90% RH, non-condensing |

## Application

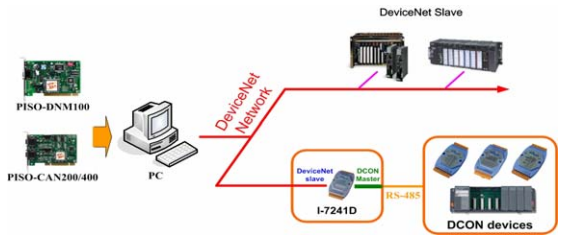


## LED Indicators

| LED | Description |
|---|---|
| MS | This LED provides device status. It indicates whether or not the device is operating properly. |
| NS | This LED indicates the status of the communication link. |
| I/O | This LED provides information of inputs and/or outputs. |

## Ordering Information

| | |
|---|---|
| **I-7241D-G** | DeviceNet Slave / DCON Master Gateway |
| **I-7241D-G CR** | DeviceNet Slave / DCON Master Gateway (RoHS) |