LORENZ MESSTECHNIK GmbH Obere Schloßstr.131 D-73553 Alfdorf ☎ +49 7172/93730-0 Fax +49 7172/93730-22

Operation Manual for Sensor Interface SI-USB



1 Contents

1 Contents ... 2

2 Imprint ... 3

3 Remarks ... 4
3.1 Designation of the Remarks ... 4
3.2 Safety Notes ... 4
3.2.1 General References ... 4
3.2.2 Intended Purpose, Improper Usage ... 4
3.2.3 Installation Notes ... 4
3.2.4 Disturbance, Maintenance and Repair Notes ... 5

4 Preamble ... 6
4.1 Product Description ... 6
4.2 Safe and Correct Use ... 6

5 Technical Details of the SI-USB ... 7
5.1 Configuration of the Connections ... 7
5.2 Adjustment of the Second-Order Low Pass Filter for each Sensor Channel ... 7
5.2.1 Changing via LCV-USB-VS2 ... 7
5.2.2 Changing via LCV-USB-VS ... 7
5.2.3 Changing via Self-programmed (own) Software ... 7

6 Pin Assignments ... 8
6.1 Pin Assignment for Strain Gauge Sensors with mV Signal ... 8
6.2 Pin Assignment for Active Sensors with ±5 V or with ±10 V Signal ... 8
6.3 Pin Assignment for Active Current Sensors with 0 .. +20 mA Signal ... 8
6.4 Pin Connection for the USB-Interface ... 8

7 Other Application Examples ... 9
7.1 Multi-Component Sensor M-2354 Force and Torque (Strain Gauge/ Strain Gauge) ... 9
7.2 Displacement Sensor Potentiometric (supplied from the SI-USB) ... 9

8 Debugging ... 10

9 Specifications ... 11

10 Continuative Documents ... 12

11 Notes ... 13

2 Imprint

Manufacturer, Place	Lorenz Messtechnik GmbH, D-73553 Alfdorf.
Valid for...	SI-USB series
Copyright	© 2011 Lorenz Messtechnik GmbH, Alfdorf[1].
Reprint-Interdiction	Reprint, even in extracts, only with written authorization from Lorenz Messtechnik GmbH.
Modification	Technical changes reserved.

[1] All trademarks or brands used in this document refer only to the respective product or the holder of the trademark or brand. Lorenz Messtechnik GmbH does not raise claims to other than its own trademarks or brands.

3 Remarks

3.1 Designation of the Remarks

If possible remaining dangers emerge during the operation with SI-USB, this will be indicated by the following symbols in this operation manual:



Note:
Important points to consider

3.2 Safety Notes

3.2.1 General References

The enclosed operating instruction is intended for technically qualified personnel who have corresponding knowledge in the field of measurement and industrial process & control technology.
The precise information about all safety notes contained in this operation manual and warnings, as well as its perfect technical implementation are precondition for the safe installation, the initiation, the secure operation and the maintenance of Lorenz Messtechnik GmbH technology devices. For this purpose it is absolutely necessary that all measures are carried out by qualified personnel. All persons concerned with the project planning, installation and service of Lorenz Messtechnik GmbH devices, must be familiar to the security concepts in automatic control and should be qualified in this sense.
For clarity reasons, the enclosed operating instruction cannot represent complete details in all conceivable cases of applications for the handling of Lorenz Messtechnik GmbH devices. Further, we cannot consider the entire types of installation, handling and maintenance. If you wish further information or if special problems occur, which were not, or not at length represented in this operating instruction, contact us, please.

The oblivion of the safety notes will lead to material damages, body injuries and death.

Lorenz Messtechnik GmbH devices may only be operated in accordance with the applications described in this operation manual. Built-in devices may only be operated in appropriate installations.

With the connection and the initiation of the device, the customer accepts the general sale and delivery conditions of Lorenz Messtechnik GmbH. Further, he accepts eventually incomplete operation manuals. The information described is without guarantee. Errors and changes are reserved.

3.2.2 Intended Purpose, Improper Usage

A Lorenz Messtechnik GmbH device is used for displaying, processing and controlling or regulation of processes. It shall not be used as the only tool for the prevention of dangerous states to machines and plants. Machines and plants must be constructed in such a way, that erroneous states cannot lead to a dangerous situation for the staff (e.g. by independent limit switches, mechanical locking devices). It must be guaranteed in particular that device-operating errors, its malfunction or its breakdown do not lead to great property damages or danger for the staff. Consequently, the device then can be used to prevent the machine or the technical installations from error conditions.
It is also important that the use of devices does not endanger precautions for the safety of technical installations.
Emergency-off settings must remain effective in all operation modes.

3.2.3 Installation Notes

Lorenz Messtechnik GmbH devices must be installed and connected by compliance with the relevant DIN- and VDE-norms. They must be installed in such manner that an unintentional use is adequately excluded. The corresponding hardware and software safety precautions are to be observed in such manner that an interruption of the supply and signal cables cannot lead to an undefined or dangerous state. Supply and signal cables must be installed in such way, that disturbing signals (e.g. inductive or capacitive intersperses) will not cause derogations to the function of Lorenz Messtechnik GmbH devices.

3.2.4 Disturbance, Maintenance and Repair Notes

The devices do not contain parts which can be maintained on the customer side. Repairs shall be carried out by Lorenz Messtechnik GmbH exclusively.
If assuming that a safe operation of the device is not possible anymore, it must be closed down and protected against unintentional handling immediately. This, in particular, applies:

- If the device shows visible damages
- If the device is no longer operative
- If parts of the device are loose or slack
- If the connection cables show visible damages

Furthermore, we point out that all obligations of Lorenz Messtechnik GmbH exclusively result from the respective sales contract in which the guarantee has been conclusively settled.

4 Preamble

4.1 Product Description

The SI-USB is an amplifier which processes analogous signals and converts these signals into digital measured values. These measured data can be retrieved by the PC by means of the USB-Interface. The current supply occurs via a separate power supply which is included in delivery.

- Required output voltage: 12 .. 30 V
- Required power supply: 600 mA

The SI-USB is suitable for the connection and simultaneous value acquisition of two sensors. Depending on the SI-USB model, respectively four different types of sensor signals can be captured (for specifications see data sheet):

- Strain Gauge Signals: ±3 mV/V (equates to ±30000 Digits)
- Active Signals with Voltage Input: ±5 V (equates to ±25000 Digits)
- Active Signals with Voltage Input: ±10 V (equates to ±25000 Digits)
- Active Signals with Current Input: 0/4..20 mA (equates to 0/4000 . +20000 Digits)

The amplifier type and the resolution are stated on the type label, a type change is only possible by the manufacturer. Hence, only the corresponding sensor type can be connected.


Please consider the signal type. The connection of a wrong signal type can lead to damages.

The measured values are issued in digits (16 bit signed integer format) with leading signs (see above in brackets).
If the SI-USB is adjusted to a specific sensor, the output value will be stated on the test certificate.
If the SI-USB is not adjusted to a specific sensor, the output values are adjusted as stated above (in brackets). In this case, the output values are adjusted with a high-precise reference.

The evaluation occurs by the LCV-USB-VS2 software which contains following functions:.

- Configuration possibilities for the LCV-USB-VS2
- Storage of sensor-related scaling and adjustment data
- Display for the presentation of measured data (actual value, tare value, minimal value and maximal value)
- Presentation of the measured data in a diagram
- Storage of measured data in CSV-format (output configurable)
- Storage of the diagram in BMP-format (output size adjustable)
- Print-out of the diagram (output size defined)
- Presentation of the sensor information

The communication protocol is described in document no. 090110, “A flexible command set for digital sensors and interfaces” which states how to activate the SI-USB through own software.

4.2 Safe and Correct Use


Consider the correct sensor adjustment.


Consider the correct LCV-USB-VS2 configuration.


Choose a significant file identification/prefix when storing measured data.


Fasten housing, ground, connect power supply, protect from splash water and do not pull the cable.

5 Technical Details of the SI-USB

5.1 Configuration of the Connections

There is no maintainable connection inside the SI-USB housing. The connection of the power supply unit occurs on the side of the housing. The sensors and the digital interface can be connected through sockets as well.

5.2 Adjustment of the Second-Order Low Pass Filter for each Sensor Channel

5.2.1 Changing via LCV-USB-VS2

If a SI-USB was connected, the software offers this option in the tab for measurement adjustments.

5.2.2 Changing via LCV-USB-VS

In the advanced mode, the software offers tabs for configuration. The filter frequencies can be adjusted in configuration block STATOR_OPERATION.

5.2.3 Changing via Self-programmed (own) Software

The adjustment for channel A is stored in bytes 13 and 14 of the configuration block “STATOR_OPERATION”. The value for channel B is stored in bytes 15 and 16. Each byte represents a 16-bit value and corresponds to the cutoff-frequency according following chart:

Range of values (decimal)	Value (hexadecimal)	Adjusted cutoff-frequency
0 ≤ X ≤ 30	0x001E	30 Hz
31 ≤ X ≤ 300	0x012C	300 Hz
301 ≤ X ≤ 1000	0x03E8	1000 Hz
1001 ≤ X ≤ 65536	0x0BB8	3000 Hz

Please consider that currently adjusted cutoff-frequency will be active after rebooting, only.
For further information regarding programming with own software we refer to document 090110, Lorenz protocol “A flexible command set for digital sensors and interfaces”.

6 Pin Assignments

6.1 Pin Assignment for Strain Gauge Sensors with mV Signal

Description	Pin (6 pole socket)	Color	Remark
0 V / GND	1	green	ground reference for **5 V** and 12 V excitation
5 V	2	brown	excitation for 5 V strain gauge sensors
Shield	3	shielding	do not connect shield with sensor housing
Signal +	4	yellow	positive signal input
Signal –	5	white	negative signal input
Control	6	grey	if available in sensor

6.2 Pin Assignment for Active Sensors with ±5 V or with ±10 V Signal

Description	Pin (12 pole socket)	Color	Remark
0 V / GND	E	green	ground reference for 4 V and **12 V** excitation
12 V	F	brown	excitation for 12 V active sensors
Signal +	C	yellow	signal input
Signal –	D	white	relating to signal input (internally 0 V / GND)
Control	K	grey	if available in sensor
Shield	M	shielding	do not connect shield with sensor housing

6.3 Pin Assignment for Active Current Sensors with 0 .. +20 mA Signal

Description	Pin (12 pole socket)	Color	Remark
0 V / GND	E	green	ground reference for **12 V** excitation
12 V	F	brown	excitation for 12 V active sensors
Signal +	C	yellow	signal input
Signal –	D	white	relating to signal input (internally 0 V / GND)
Control	K	grey	if available in sensor
Shield	M	shielding	do not connect shield with sensor housing

6.4 Pin Connection for the USB-Interface

The pin connection of the USB-Interface corresponds to the DIN IEC 61076-3-108 Standard. (Mini-B)

7 Other Application Examples

7.1 Multi-Component Sensor M-2354 Force and Torque (Strain Gauge/ Strain Gauge)

The multi-component sensor M-2354 is directly connected to the SI-USB/DMS/DMS with both outputs.
The system allows simultaneous recording of force-torque-courses which chronologically refer to each other.



7.2 Displacement Sensor Potentiometric (supplied from the SI-USB)

A SI-USB with minimum U5-input is suitable.
The accuracy of the displacement measurement is depending on the quality of the reference voltage.

With this set-up, arbitrary measuring variables, depending on displacement measurements, can be recorded and referred to each other.

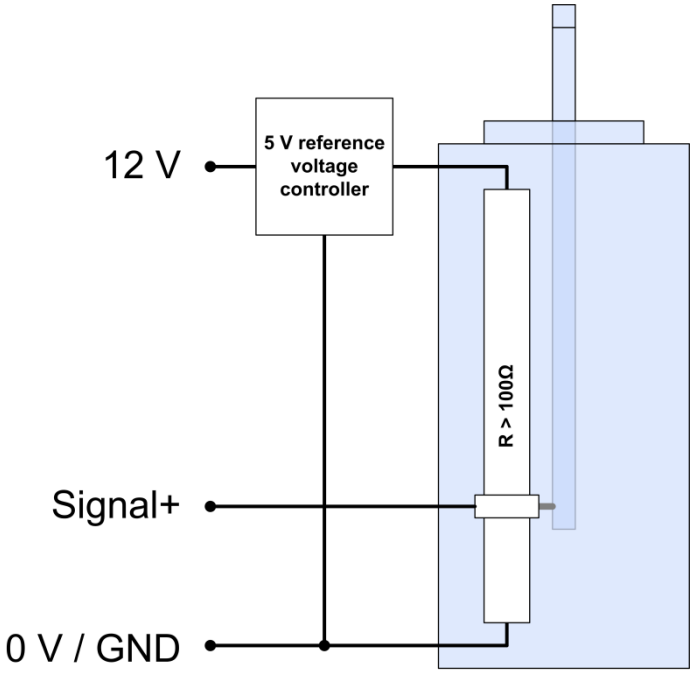

Output 0..25000 Digits

8 Debugging

This chart helps to find frequent errors and the measures for debugging.

Error	Possible Cause	Debugging
A connection to the SI-USB is not possible.	Driver incorrectly or not installed.	Install driver package. The first start-up of the SI-USB must be carried out with administrator rights.
	Supply voltage is overloaded.	Check whether the connected sensor corresponds to the specifications of the SI-USB. If the sensor requires higher current than available for the SI-USB, this sensor cannot be used together with the SI-USB.
	Power supply not connected.	Connect power supply.
	Supply voltage is shortened.	Fix the short circuit.
Output signal is at the upper or lower modulation limit	Active-sensor or current-sensor is connected to the strain gauge input.	Check on type label for which input type has been configured for the applied sensor connection.
	Supply voltage connected to sensor input.	Check/correct the pin assignment
Output signal fluctuates (strain gauge)	Open sensor input.	Connect sensor
	Cut-off frequency adjustment not correctly set.	Set cut-off frequency as described in chapter 5.2

9 Specifications

Type	SI-USB/DMS/DMS	SI-USB/U5/U5	SI-USB/U10/U10	SI-USB/I20/I20	SI-USB/DMS/U5
Article-No.	111963	111964	113022	111966	111973
Input Range	2* ±3 mV/V	2* ±5 V	2* ±10 V	2* 0/4…20 mA	±3 mV/V; ±5 V
Type	**SI-USB/DMS/U10**	**SI-USB/DMS/I20**	**SI-USB/U5/U10**	**SI-USB/U5/I20**	**SI-USB/U10/I20**
Article-No.	113021	111974	113023	111975	113024
Input Range	±3 mV/V; ±10 V	±3 mV/V; 0/4…20 mA	±5 V; ±10 V	±5 V; 0/4...20 mA	±10 V; 0/4...20 mA

Evaluation Side

Supply Power Supply[1] Output Power Supply Supply Voltage SI-USB	Voltage	100…240 V AC 24 V DC 1.25 A 12...30 V DC ≤600 mA
Excitation Sensor	Strain Gauge U5/U10/I20	5 V ≤20 mA 12 V ≤200 mA
Measured Values	Strain Gauge U5/U10 I20	±3 mV/V = ±30000 Digits ±5 V/±10 V = ±25000 Digits 0/4…20 mA = 0/4000…20000 Digits
Resolution	Strain Gauge U5 U10 I20	1 mV/V = 10000 Digits 1 V = 5000 Digits 1 V = 2500 Digits 1 mA = 1000 Digits
Zero Point	Strain Gauge/U5/ U10/I20	0 Digits
Output Format		16 Bit Signed Int.
Input Resistance	Strain Gauge/U5/U10 I20 burden	>1 MΩ 62 Ω
Second-Order Low-Pass Filter	Hz	30/300/1000/3000
Measuring Rate		max. 2500 Meas./s
Temperature Drift		4 Bit/10 K
Linearity Error		±32 Digits
Accuracy		±32 Digits

Miscellaneous

Cable Length SI-USB - Sensor		1 m (max. 3 m)
Nominal Temperature Range		10 … 40 °C
Service Temperature Range		0 ... 50 °C
Storage Temperature Range		-10 ... 70 °C
Dimensions (L x B x H)		125 x 80 x 57 mm
Weight		480 g
Level of Protection		IP40
Electrical Connection	Strain Gauge U5/U10/I20 USB[2]	Female socket 6-pin Female socket 12-pin PX0446 IP68 B Mini USB

Options/ Accessories

Article-No.	Type	Designation
110564	mV/V	mV/V adjusted sensitivity
10302	KS6	Male cable connector 6-pin
10303	KS12	Male cable connector 12-pin
10296	KDM7/A-KS6/A-3m/PVC	Connection cable for passive sensors, 3 m, with 7-pin female cable connector and 6-pin male cable connector
10271	KD6/A-KS6/A-3m/PVC	Connection cable for passive sensors, 3 m, with 6-pin female cable connector and 6-pin male cable connector
10279	KDM8/A-KS12/B-3m/PVC	Connection cable for active sensors, 3 m, with 8-pin female cable connector and 12-pin male cable connector
10283	KD12/B-KS12/B-3m/PVC	Connection cable for active sensors, 3 m, with 12-pin female cable connector and 12-pin male cable connector

[1] At first delivery power supply in scope of delivery.
[2] At first delivery cable SI-USB evaluation in scope of delivery, cable length 3 m.

10 Continuative Documents

Following documents contain reference information about the SI-USB:

- Document number 090315, “Operation Manual for Sensor Interface SI-USB (2-Channel)” (German 090314).
- Document number 080722, data sheet “Sensor-Interface with USB (Type: SI-USB 2-Channel)” (German 080721).
- Document number 090313, “Operation Manual for Configuration and Evaluation Software LCV-USB-VS2“ (German 090312).
- Document number 090235, “Driver Installation Description for Sensor-Interface and LCV-USB, SI-USB and Sensors with USB Interface (USB Driver.exe)“ (German 090198).
- Document number 090110 Lorenz protocol “A flexible command set for digital sensors and interfaces“.

11 Notes