Lorenz® messtechnik gmbh

Compression and Tension Force Sensor K-2698 with Nominal Force from 100 ... 600 kN

Data sheet

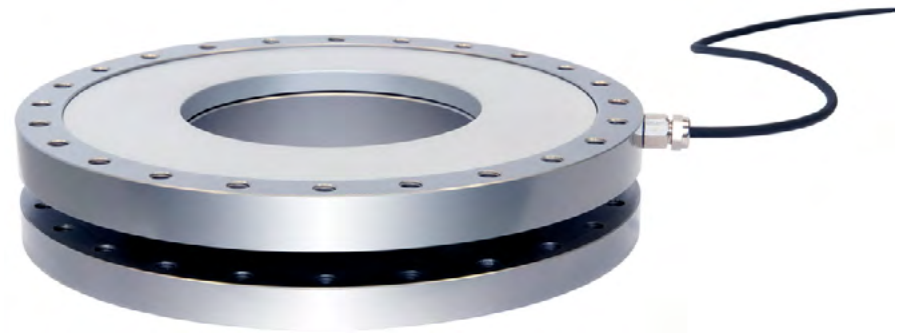

Performance Features

- Measuring of compression and tension force
- Stainless steel
- Level of protection IP60
- Long-term stability
- Simple handling and assembly
- Special versions on request

Application

- Equipment engineering
- Automotive industry
- Measuring and control devices
- Fully automated machining centres
- Tool engineering
- Special mechanical engineering

Lorenz Messtechnik GmbH Obere Schlossstrasse 127/129/131,
73553 Alfdorf Tel. +49 7172 93730-0, Fax +49 7172 93730-22
info@lorenz-messtechnik.de, www.lorenz-messtechnik.de

All data sheets can be found at www.lorenz-messtechnik.de
Technical modification to reserve.

Dimensions of K-2698 in mm

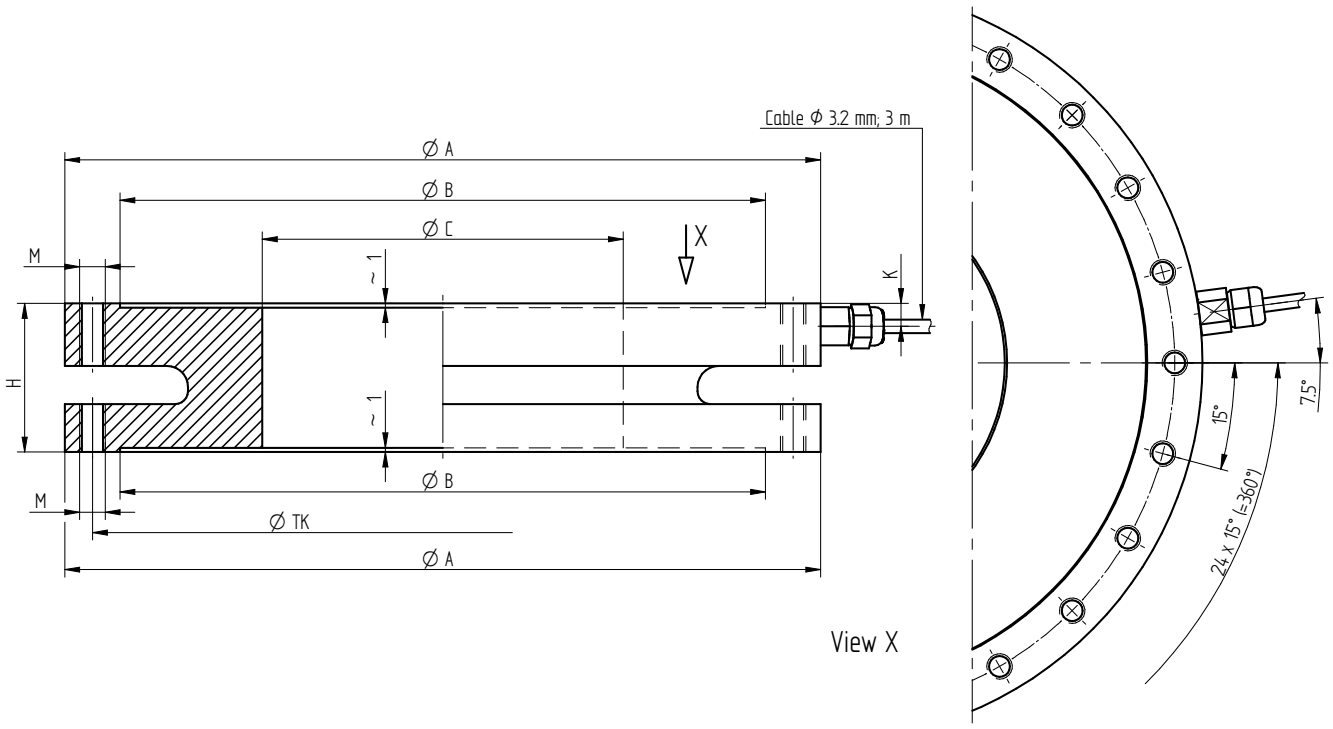

Article-No.	Nominal Force [kN]	Dimensions [mm]							Weight [kg]
		ØA	ØB	ØC	H	K	M	ØTK	
111308	100	178	152	85	35	5.4	M6	165	3.6
111591	200	196	170	120	35	7	M8	182	3.6
112102	300	258	226	180	35	8	M10	242	4.8
113833	400	258	226	170	45	8	M12	242	7.4
113030	600	320	266	205	60	12.5	M16	290	15.1

Pin Connection

Electrical connection		
Excitation (-)	green	
Excitation (+)	brown	
Signal (+)	yellow	
Signal (-)	white	
Control signal (option)	grey	
Shield	shield	

Technical Data acc. to VDI/VDE/DKD 2638

Compression and Tension Force Sensor K-2698 with Through Hole							
Nominal force F_{nom}	kN	100	200	300	400	600
Accuracy class compression force or tension force	% F_{nom}	0.5				
Accuracy class compression force and tension force	% F_{nom}	1.0				
Rel. repeatability error in unchanged mounting position b_{rg}	% F_{nom}	0.1				
Relative creep	% F_{nom}/30 min	<±0.1				
Rated characteristic value C_{nom}	mV/V	1.00 ±20%				
Input/output resistance R_e/R_a	Ω	700				
Insulation resistance R_{is}	Ω	>2*10^9				
Rated range of excitation voltage $B_{U, nom}$	V	2 ... 12				
Electrical connection		Cable, PURS, 3 m with free strands				
Reference temperature T_{ref}	°C	23				
Rated temperature range $B_{T, nom}$	°C	-10 ... 70				
Operating temperature range $B_{T, G}$	°C	-30 ... 80				
Storage temperature range $B_{T, S}$	°C	-50 ... 95				
Temperature effect on zero signal TK_0	% F_{nom}/10 K	±0.2				
Temperature effect on characteristic value TK_C	% F_{nom}/10 K	±0.2				
Maximum operating force F_G	% F_{nom}	130				
Force limit F_L	% F_{nom}	150				
Breaking force F_B	% F_{nom}	>300				
Permissible oscillation stress F_{rb}	% F_{nom}	70				
Rated displacement S_{nom}	mm	<0.15				
Material housing body		Stainless steel				
Material cover plate		Aluminum				
Level of protection		IP60				

Options

Article-No.	Description	
100218	Control signal	100 % F_{nom}
100896	Nominal sensitivity adjustment	
42828	Extended temperature range	-30 °C … 100 °C
42829	Extended temperature range	-30 °C … 120 °C
42830	Extended temperature range	-40 °C … 150 °C
103954	Calibration in kg or t	
107592	6-wire connection	

Calibrations

Article-No.	Description	
400628	Linearity diagram in accordance to factory standard	25 % steps
400170	Linearity diagram in accordance to factory standard	10% steps
400960	Proprietary calibration acc. to DIN EN ISO 376 and DAkkS-DKD-R 3-3	3 steps
400652	Proprietary calibration acc. to DIN EN ISO 376 and DAkkS-DKD-R 3-3	5 steps
400640	Proprietary calibration acc. to DIN EN ISO 376 and DAkkS-DKD-R 3-3	8 steps
	DAkkS-Calibration/Standard on request	

Accessories

Cable and input connector

Article-No.	Description
10323	Cable connector KS6 (6-pin series 581) incl. sensor mounting
10320	Cable connector KSSH15 (15-pin) incl. sensor mounting
43418	Input connector ZA9612FS (ALMEMO) incl. sensor mounting and connector calibration
49205	Input connector ZKD712FS (ALMEMO 202) incl. sensor mounting and connector calibration

Amplifiers

Examples of suitable amplifiers for the compression and tension force sensor K-2698:

LCV	SI-USB	GM 40	GM 80	GM 80-PA
				

Further suitable amplifiers you can find on our homepage under www.lorenz-messtechnik.de.