Lorenz® messtechnik gmbh

Rotating Torque Sensor DR-2113 (contactless) with Nominal Torque from 0.1 ... 5000 N·m

Data sheet



This sensor has a contactless and digital signal transmission from rotor to stator without signal falsification of the measurement data. It is therefore highly accurate and maintenance-free.

Performance Features

- Torque sensor for screw driving systems
- High accuracy
- Active output ±5V (optional ±10V)
- Integrated speed/angle measurement, optional
- Drive-square socket/output-square drive
- Speed up to 4000 min^{-1}
- Very short axial length
- High torsional stiffness
- Simple handling and assembly
- Special versions on request

Application

- Assembly technology
- Process measuring and control technology
- Automotive industry
- Measuring and control devices
- Tool engineering
- Special mechanical engineering

Dimensions of DR-2113 in mm

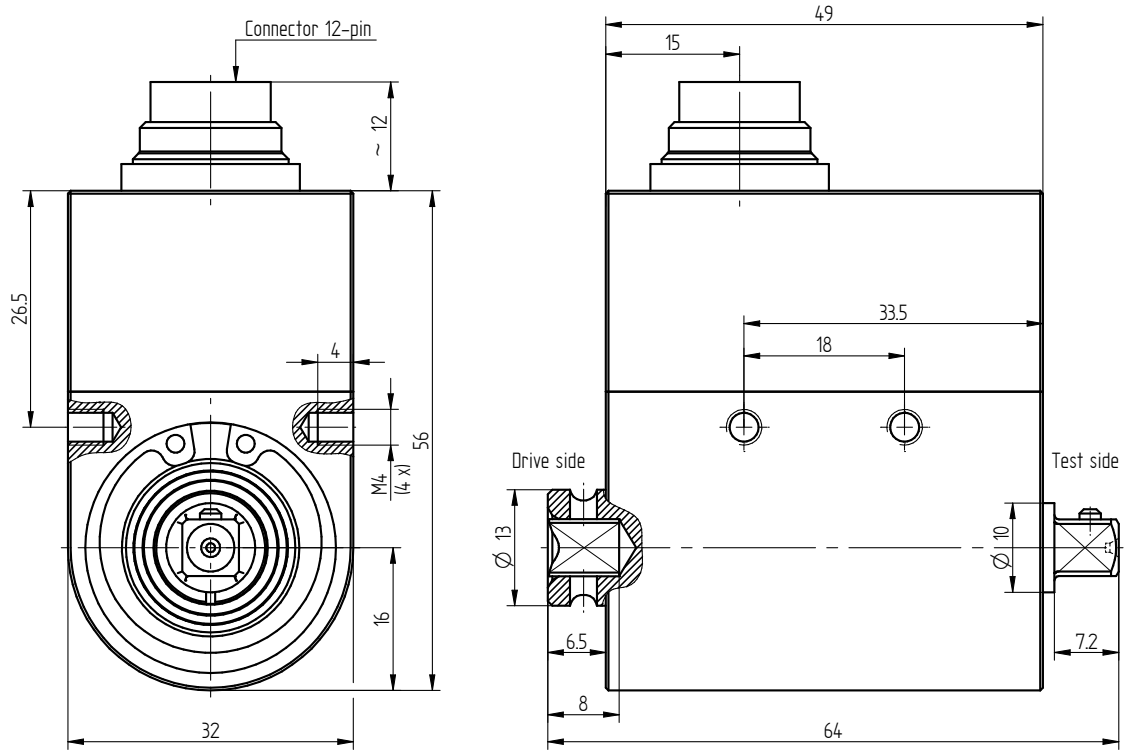

Nominal Torque [N·m]	Square	Weight [kg]
0.1/0.2/0.5/1/2/5/10/15/20	1/4“	0.2

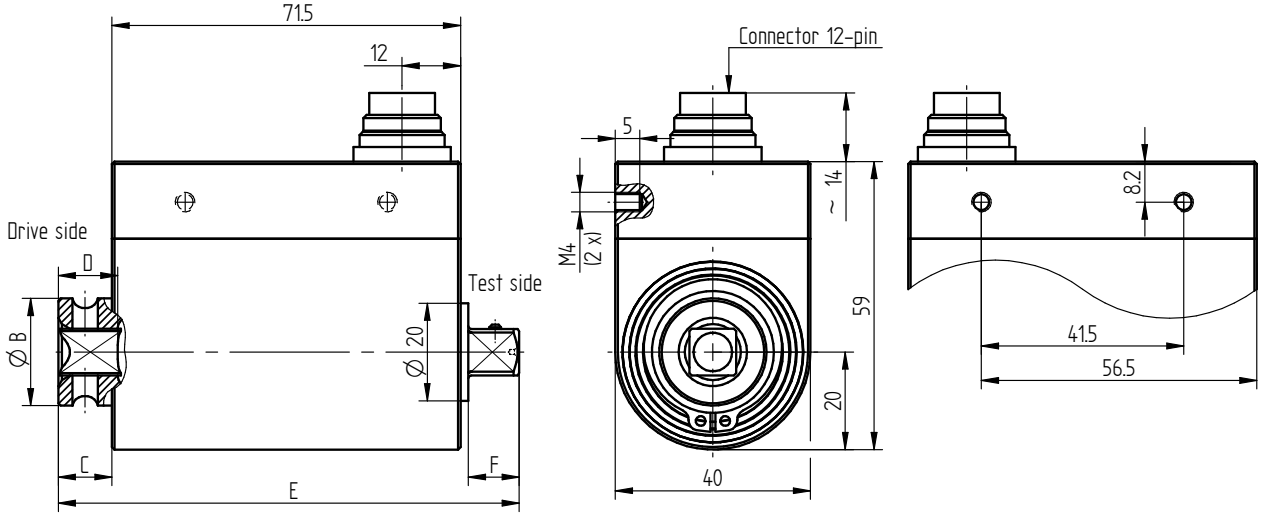

Nominal Torque [N·m]	Square	Dimensions [mm]					Weight [kg]
		B	C	D	E	F	
35/50/63	3/8“	22	11	12.2	94.5	10.4	0.5
100/160/200	1/2“	29.8	13	15	100.5	15.1	0.5

Dimensions of DR-2113 in mm

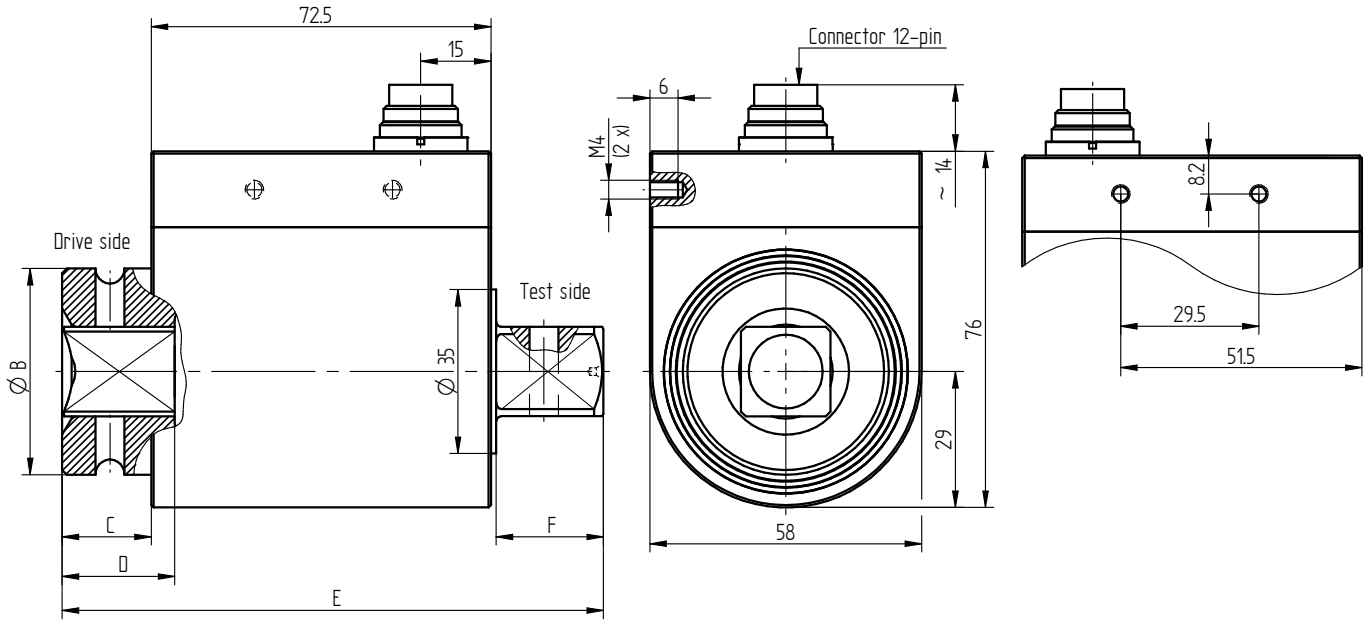

Nominal Torque [N·m]	Square	Dimensions [mm]					Weight [kg]
		B	C	D	E	F	
500	3/4“	44	19	24	115.5	22.9	1.1
1000	1“	54	29	26.5	130.5	27.4	1.5

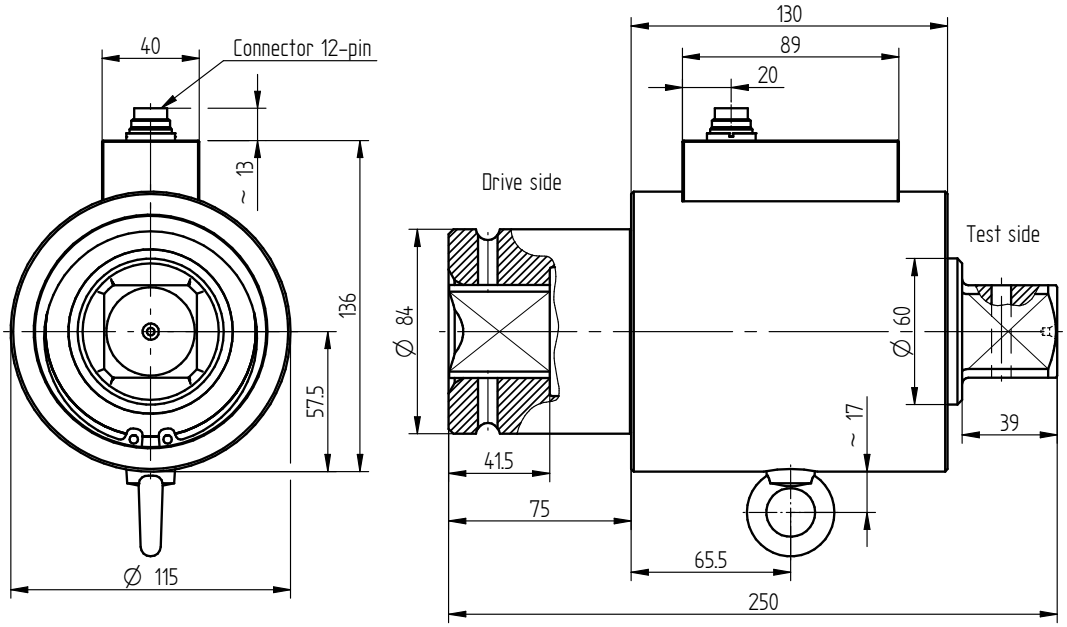

Nominal Torque [N·m]	Square	Weight [kg]
2000	1 1/2“	8.0
5000	1 1/2“	8.2

Connection Assignment

12-pin	DR-2113		Series 581
Pin A	NC	-	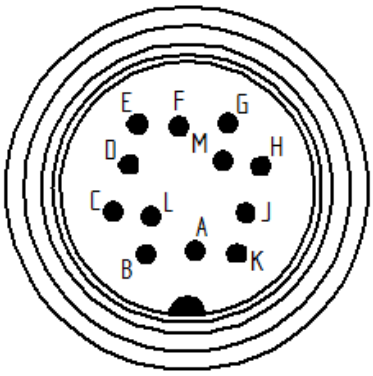
Pin B	Signal angle B (option)	5V TTL	
Pin C	Signal (+)	±5V (±10V)	
Pin D	Signal (GND)	0V	
Pin E	Supply (GND)	0V	
Pin F	Supply (+)	12 ... 28VDC	
Pin G	Signal angle A (option)	5V TTL	
Pin H	NC	-	
Pin J	NC	-	
Pin K	Control signal	L <2.0V; H >3.5V	
Pin L	NC	-	
Pin M	Shield		

Technical Data acc. to VDI/VDE/DKD 2639

Torque Sensor DR-2113		
Nominal torque $\mathbf{M_{nom}}$	N·m	0.1 ... 5000
Accuracy class	% M_{nom}	0.1
Relative repeatability error in unchanged mounting position **b'**	% M_{nom}	±0.02
Rated range of supply voltage	VDC	12 ... 28
Current consumption	mA	≤60
Output signal	V	±5
Control signal excitation	V	L <2.0; H >3.5
Sample rate	kSample/s	10
Electrical connection		12-pin series 581[1]
Reference temperature $\mathbf{T_{ref}}$	°C	23
Rated temperature range	°C	5 ... 45
Operating temperature range	°C	0 ... 60
Storage temperature range	°C	-10 ... 70
Temperature effect on zero signal $\mathbf{TK_0}$	% M_{nom}/10 K	±0.2
Temperature effect on characteristic value $\mathbf{TK_C}$	% M_{nom}/10 K	±0.1
Maximum operating torque $\mathbf{M_G}$ (static)	% M_{nom}	150
Torque limit $\mathbf{M_{max}}$ (static)	% M_{nom}	200
Breaking torque $\mathbf{M_B}$ (static)	% M_{nom}	>300
Permissible oscillation stress when subjected to torque **Mdf**	% M_{nom}	70 (peak-to-peak)
Level of protection		IP50

[1] Female cable connector in scope of delivery at first delivery

Technical Data acc. to VDI/VDE/DKD 2639 (continued)

Article-No.	Nominal Torque [N·m]	Limit Speed [min^{-1}]	Springrate [N·m/rad]	Mass Moment of Inertia [kg·m²][2]		Axial Force Limit [N][3]	Lateral Force Limit [N][3]
				Drive Side	Test Side		
103803	0.1	3000	1.8E+01	2.1E-06	3.3E-07	42	1.2
103804	0.2	3000	1.8E+01	2.1E-06	3.3E-07	42	1.2
103805	0.5	3000	1.2E+02	2.1E-06	3.3E-07	185	2.9
102604	1	3000	1.2E+02	2.1E-06	3.3E-07	260	4.7
103367	2	4000	3.0E+02	2.1E-06	3.3E-07	480	12.2
102605	5	4000	5.9E+02	2.1E-06	3.5E-07	870	30
102460	10	4000	7.3E+02	2.1E-06	3.6E-07	1150	45
103798	15	4000	7.3E+02	2.1E-06	3.6E-07	1150	45
102606	20	4000	7.3E+02	2.1E-06	3.6E-07	1150	45
102459	35	3000	8.6E+03	1.0E-05	1.1E-05	3300	110
102193	50	3000	1.0E+04	1.0E-05	1.1E-05	4200	155
102272	63	3000	1.1E+04	1.0E-05	1.1E-05	4900	190
101882	100	2500	1.2E+04	1.6E-05	1.1E-05	4000	135
102388	160	2500	1.5E+04	1.6E-05	1.2E-05	5500	215
102065	200	2500	1.5E+04	1.6E-05	1.2E-05	5500	215
102969	500	2500	8.8E+04	9.9E-05	7.7E-05	13500	840
102273	1000	1500	1.3E+05	2.1E-04	1.1E-04	16500	1000
103799	2000	1000	2.1E+05	3.5E-03	1.8E-03	27000	1650
103801	5000	1000	2.7E+05	3.5E-03	1.8E-03	51000	4000

Options

Article-No.	Description	
103562	Output signal	±10V
101560	Speed/angle measurement, 2 x 360 impulses, 90° displaced	5V TTL, CW-turn 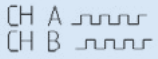

Calibrations

Article-No.	Description	
400676	Linearity diagram in accordance to factory standard	25 % steps
400664	Linearity diagram in accordance to factory standard	10% steps
400961	Proprietary calibration acc. to VDI/VDE 2646	3 steps
400700	Proprietary calibration acc. to VDI/VDE 2646	5 steps
400688	Proprietary calibration acc. to VDI/VDE 2646	8 steps
401023	Proprietary calibration for the angle of rotation acc. to VDI/VDE 2648-1	
	DAkkS-Calibration / Standard on request	

[2] Without option speed/angle measurement
[3] Unsupported shaft

Accessories

Electrical Connection

Article-No.	Description
41382	Female cable connector 12-pin series 581
45598	Female angled connector 12-pin series 682
10270	Connection cable, 3 m, with 12-pin female cable connector series 581 and free strands
10345	Connection cable angled, 3 m, with 12-pin female angled connector series 682 and free strands

Amplifiers

Examples of suitable amplifiers for the torque sensor DR-2113:

LCV-USB2	SI-ETH	SI-USB3	GM 80	GM 80-PA
	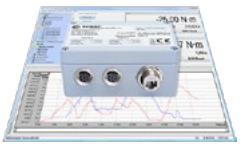			

Further suitable amplifiers you can find on our homepage under https://www.lorenz-messtechnik.de/english/products/.