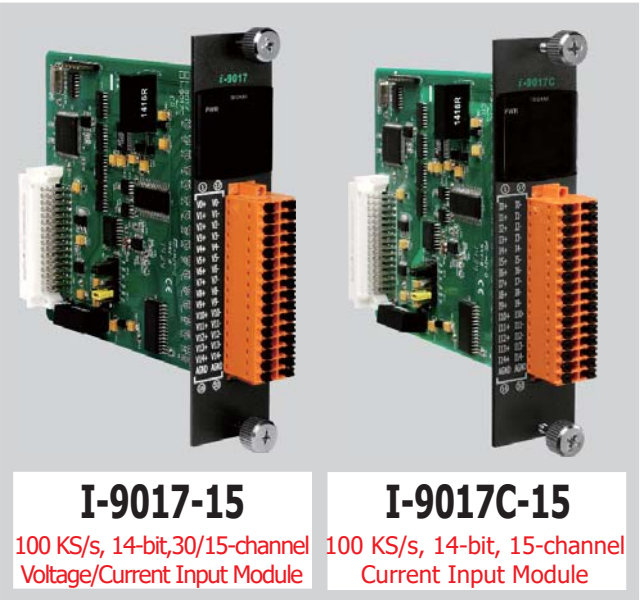

I-9017-15
100 KS/s, 14-bit,30/15-channel Voltage/Current Input Module

I-9017C-15
100 KS/s, 14-bit, 15-channel Current Input Module

Features

- I-9017-15
  - 30 Single-ended/15 Differential Input Channels (jumper selectable)
  - Input Range: ±1.25 V, ±2.5 V, ±5 V, ±10 V, ±20 mA
- I-9017C-15
  - 15 Differential Input Channels
  - Input Range: ±20mA
- 14-bit 100 KHz AD Converter
- A/D Trigger Mode: Polling, Interrupt
- 4 kV ESD Protection
- Wide Operating Temperature Range: -25 to +75°C

Introduction

The I-9017-15/I-9017C-15 is a high performance Analog Input module with 14 bits of resolution and a sampling rate of up to 100 kS/s. The I-9017-15 provides up to 30 single-ended or 15 differential input channels, which is selectable via a jumper setting. The I-9017C-15 provides up to 15 differential input channels for current measurement. Both the two modules have qualification for 4 kV ESD protection as well as 2500 Vrms intra-module isolation.

Applications

- High speed data acquisition system
- Process monitor and control
- Vibration analysis
- Digital pattern generator from digital I/O port

System Specifications

Model	I-9017-15	I-9017C-15
LED Indicators/Display		
System LED Indictor	1 LED as Power Indicator	
I/O LED Indicator	-	
Isolation		
Intra-module Isolation, Field-to-Logic	2500 Vrms	
EMS Protection		
ESD (IEC 61000-4-2)	±4 kV Contact for each Terminal	
	±8 kV Air for Random Point	
Power		
Power Consumption	2 W Max.	
Mechanical		
Dimensions (L × W × H)	144 mm × 30.3 mm × 134 mm	
Environment		
Operating Temperature	-25 ~ +75°C	
Storage Temperature	-40 ~ +85°C	
Humidity	10 ~ 90% RH, Non-condensing	

I/O Specifications

Model	I-9017-15	I-9017C-15
Analog Input		
Channels	30-ch Single-ended/ 15-ch Differential	15-ch Differential
Voltage Input Range	±1.25, ±2.5, ±5 V, ±10 V	-
Current Input Range	-20 mA ~ +20 mA (Requires Optional External 125 Ω Resistor)	-20 mA ~ +20 mA
Resolution	14-bit	
Accuracy	±0.1% of FSR	
Sample Rate	Single Channel Polling Mode :100K S/s Single Channel Interrupt Mode: 50K S/s 15-channel Scan Mode : 16 K S/s	
Input Bandwidth	100 KHz	
Zero Drift	± 0.1 uV/°C	
Span Drift	± 10 ppm/°C	
Input Impedance	20 K, 200 K, 20 M (Jumper Selectable)	125 Ω

Internal I/O Structure

I-9017-15

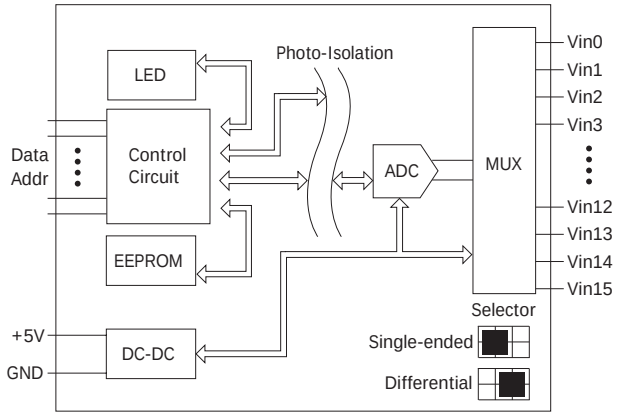

I-9017C-15

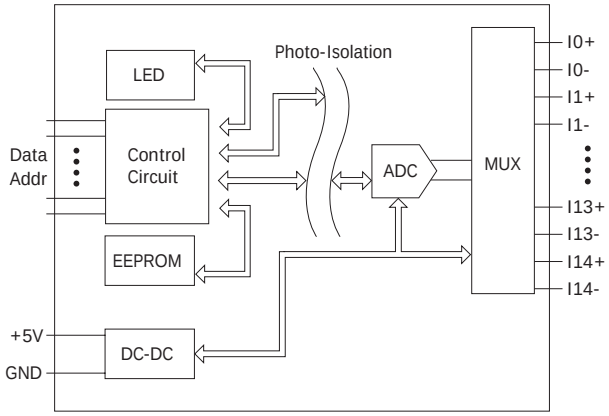

Pin Assignments

I-9017-15

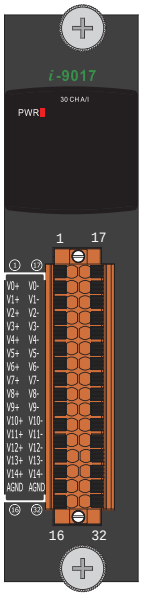

Pin Assignment		Terminal No.			Pin Assignment	
V0+	Vin0	01		17	V0 -	Vin15
V1+	Vin1	02		18	V1 -	Vin16
V2+	Vin2	03		19	V2 -	Vin17
V3+	Vin3	04		20	V3 -	Vin18
V4+	Vin4	05		21	V4 -	Vin19
V5+	Vin5	06		22	V5 -	Vin20
V6+	Vin6	07		23	V6 -	Vin21
V7+	Vin7	08		24	V7 -	Vin22
V8+	Vin8	09		25	V8-	Vin23
V9+	Vin9	10		26	V9 -	Vin24
V10+	Vin10	11		27	V10 -	Vin25
V11+	Vin11	12		28	V11 -	Vin26
V12+	Vin12	13		29	V12 -	Vin27
V13+	Vin13	14		30	V13 -	Vin28
V14+	Vin14	15		31	V14 -	Vin29
AGND	AGND	16		32	AGND	AGND

32-pin Connector

I-9017C-15

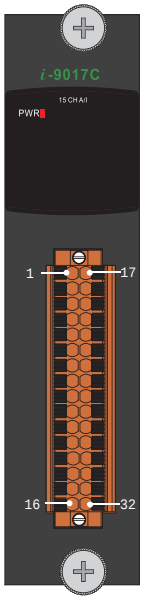

Pin Assignment	Terminal No.		Pin Assignment
I0+	01	17	I0 -
I1+	02	18	I1 -
I2+	03	19	I2 -
I3+	04	20	I3 -
I4+	05	21	I4 -
I5+	06	22	I5 -
I6+	07	23	I6 -
I7+	08	24	I7 -
I8+	09	25	I8-
I9+	10	26	I9 -
I10+	11	27	I10 -
I11+	12	28	I11 -
I12+	13	29	I12 -
I13+	14	30	I13 -
I14+	15	31	I14 -
AGND	16	32	AGND

32-pin Connector

Wire Connections

I-9017-15	
Input Type	**Differential**
Voltage Input Wiring	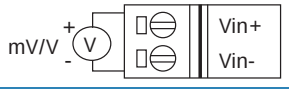
Current Input Wiring	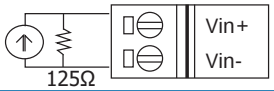
Input Type	**Single-ended**
Voltage Input Wiring	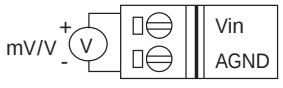
Current Input Wiring	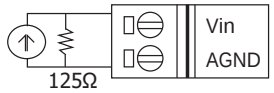

I-9017C-15	
Input Type	**Differential**
Current Input Wiring	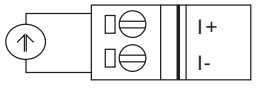

Dimensions (Units: mm)

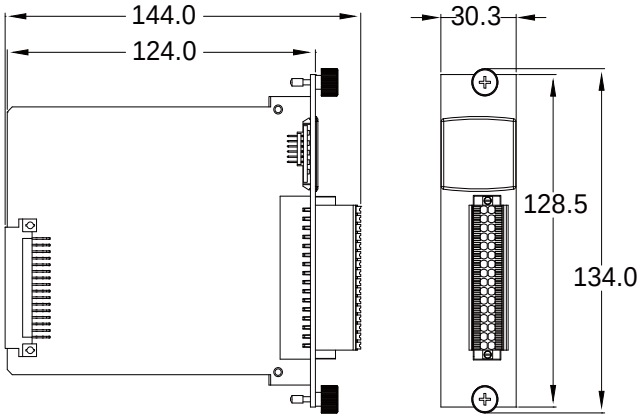

Left View | Front View

Ordering Information

I-9017-15 CR	14-bit, 100 K sampling rate, 30/15-channel analog input module (RoHS)
I-9017C-15 CR	14-bit, 100 K sampling rate, 15-channel analog input module (RoHS)