M2M Series Products

Industrial 4G LTE module



I-8213W-4G Series

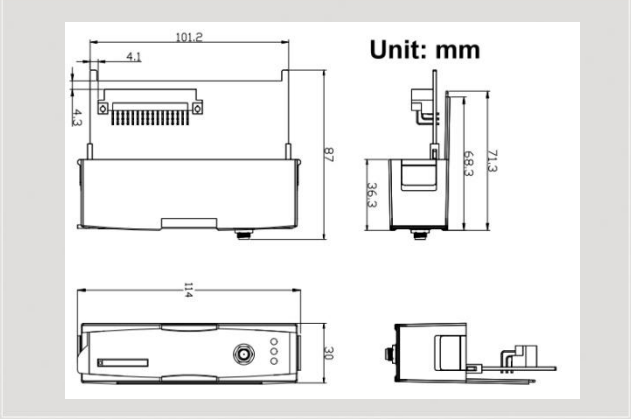

Dimensions

The I-8213W-4G series are industrial 4G LTE modules with GPS function that work on frequencies of FDD LTE B1/B3/B5/B7/B8/B20(I-8213W-4GE) or FDD LTE B1/B3/B8 and TDD LTE B38/B39/B40/B41(I-8213W-4GC). WCDMA 850/900/2100 MHz and GSM 850 MHz, EGSM 900 MHz, DCS 1800 MHz, PCS 1900 MHz .These modules utilize the 4G, 3G or GSM/GPRS network for convenient and inexpensive data transfer from remote instruments, meters, computers or control systems in either live data or packet data. I-8213W-4G has the integrated TCP/IP stack so that even simple controllers with serial communications ports can be connected to the modem without the need for special driver implementation. With the features of I-8213W-4G, the systems can be SMS, GPRS and 4G connection applications with our PAC series like WinPAC-8000, LinPAC-8000 or XP-8000.

Features

- Support FDD LTE
  B1/B3/B5/B7/B8/B20(I-8213W-4GE)
- FDD LTE B1/B3/B8 and TDD LTE
  B38/B39/B40/B41(I-8213W-4GC)
- 4 KV ESD Protection
- Designed for FDD LTE, WCDMA, GPRS and SMS Applications
- Supports TCP Server, TCP Client, UDP Client Connection stack from 4G, 3G or GPRS
- Supports Standard AT Commands
- LED Indicators for Power and GSM Indication
- High Reliability in Harsh Environment
- Supports 32-channels GPS and NMEA v0183 v3.01
- PPS: 100 ms pulse output/sec for precise timekeeping and time measurement

Support PAC

Model	I-8213W-4GE
WinPAC-8000-CE7 (WinCE 7.0)	V
LinPAC-8000 (Linux kernel 2.6.19)	V
iPAC-8000 Compact PAC (MiniOS 7)	V
XP-8000 (Windows Embedded Standard 2009)	V

Pin Assignment

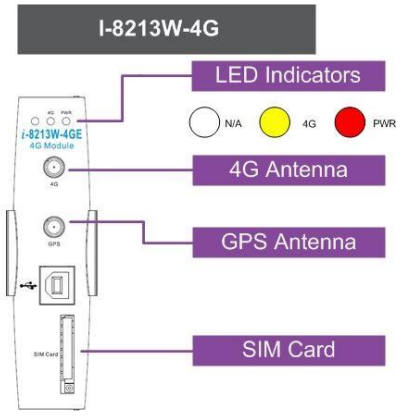

Hardware Specifications

Models	I-8213W-4GE	I-8213W-4GC
4G System		
Frequency Band(FDD)	B1/B3/B5/B7/B8/B20	B1/B3/B8
Frequency Band(TDD)		B38/B39/B40/B41
3G System		
Frequency Band(WCDMA)	850/900/2100 MHz	900/2100 MHz
Frequency Band(TDSCDMA)		1900/2100 MHz
GSM/GPRS System		
Frequency Band	850/900/1800/1900 MHz	900/1800MHz
GPRS connectivity	GPRS class 12; GPRS station class B	
DATA	GSM max. 85.6kb/s UMTS max. 384kb/s DC-HSPA+ max. 42mb/s LTE-FDD max. 100mb/s	
Coding Schemes	CS 1, CS 2, CS 3, CS 4	
SMS		
SMS	MT, MO, CB, Text and PDU mode	
Comm. Interface		
USB	USB 2.0 (high speed)	
GPS Interface		
Support Channels	32	
Protocol Support	NMEA 0183	
LED Indicators		
Power	Red color	
GPRS	Yellow color	
Power		
Frame Ground Protection	ESD, Surge, EFT, Hi-Pot	
Power Consumption	Idle: 0.15 A @ 5 V_{DC}; Data Link: 0.2 ~ 1.62 A (peak) @ 5 V_{DC}	
Mechanical		
Casing	Plastic	
Dimensions (W x L x H)	30mm x 85mm x 114mm	
Environment		
Operating Temperature	-25℃ ~ +75 ℃	
Storage Temperature	-30℃ ~ +80 ℃	
Humidity	5~95% RH, non-condensing	

Applications

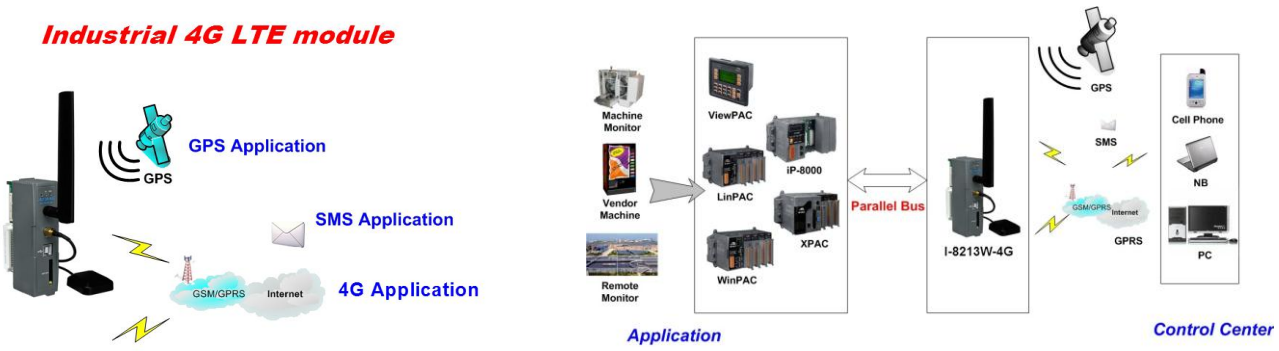

Ordering Information

I-8213W-4GE CR	Industrial 4G LTE module with GPS function (RoHS), for Europe and Taiwan
I-8213W-4GC CR	Industrial 4G LTE module with GPS function (RoHS), for China