3onedata
Make network communication more reliable

ES209G-1GF
Unmanaged Ethernet Switch Quick Installation Guide

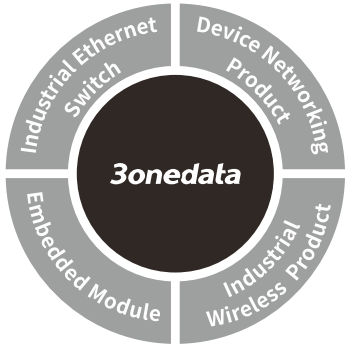

3onedata Co., Ltd.

Address: 3/B, Zone 1, Baiwangxin High Technology Industrial Park, Xili, Nanshan District, Shenzhen
Website: www.3onedata.com
Tel: +86 0755-26702688
Fax: +86 0755-26703485

【Package Checklist】

Please check whether the package and accessories are intact while using the switch for the first time.

1. Industrial Ethernet switch
2. Certification
3. Quick installation guide
4. Warranty card
5. DIN-Rail mounting attachment
6. Terminal blocks

If any of these items are damaged or lost, please contact our company or dealers, we will solve it ASAP.

【Product Overview】

The product is full Gigabit unmanaged DIN-Rail Ethernet switch. Module as follows: ES209G-1GF (8 Gigabit copper ports + 1 Gigabit fiber ports).

【Panel Design】

➢ **Rear view, Top view and Bottom view**

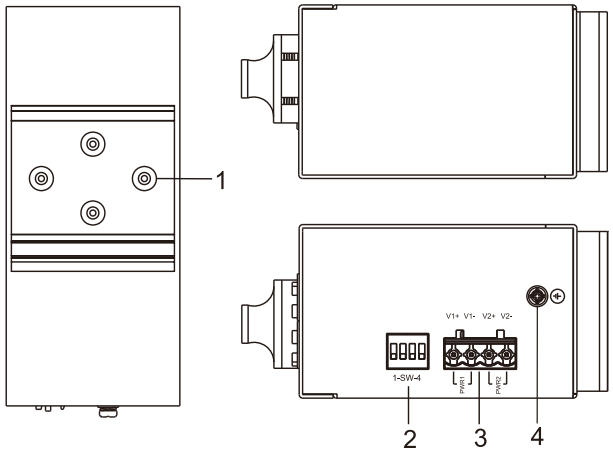

➢ **Front view**

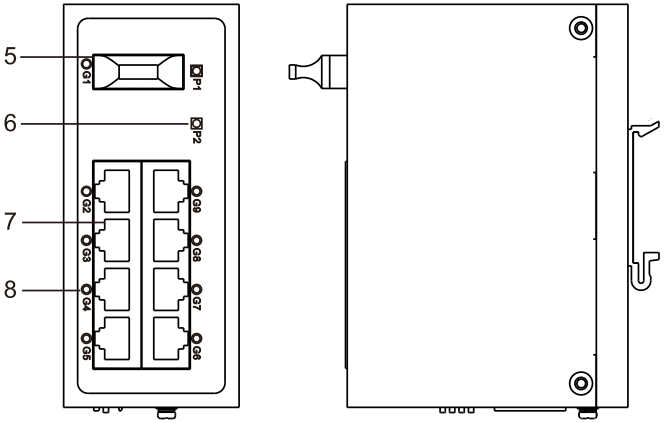

1. DIN-Rail mounting kit
2. DIP switch
3. Power input terminal block
4. Grounding screw
5. 1000Base-FX Gigabit Ethernet fiber port
6. Power supply input status indicator
7. 10/100/1000Base-T(X) Ethernet port
8. Interface indicator

【Mounting Dimension】

Unit: mm

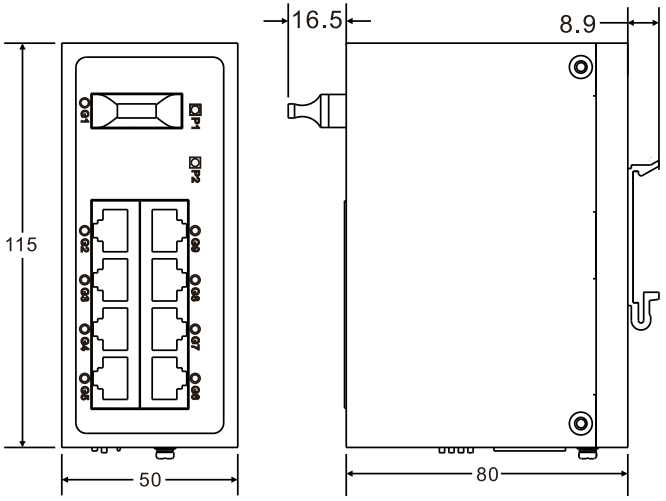

Attention before mounting:

- Don't place or install the device in area near water or moist, keep the relative humidity of the device surrounding between 5%~95% without condensation.
- Before power on, first confirm the supported power supply specification to avoid over-voltage damaging the device.
- The device surface temperature is high after running; please don't directly contact to avoid scalding.

【DIN-Rail Mounting】

For convenient usage in industrial environments, the product adopts 35mm DIN-Rail mounting, mounting steps as below:

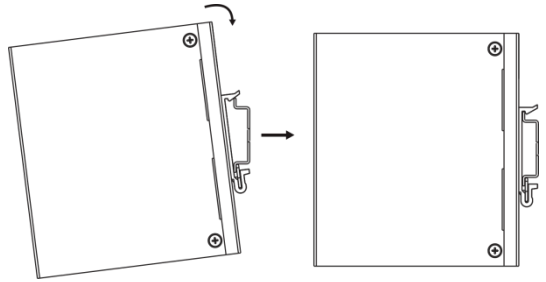

Step 1 Check if the DIN-Rail mounting kit is installed firmly.

Step 2 Insert the bottom of DIN-Rail mounting kit (one side with spring support) into DIN-Rail, and then insert the top into DIN-Rail.

Tips:

Insert a little to the bottom, lift upward and then insert to the top.

Step 3 Check and confirm the product is firmly installed on DIN-Rail, then mounting ends.

【Disassembling DIN-Rail】

Step 1 Device power off.

Step 2 After lift the device upward slightly, first shift out the top of DIN-Rail mounting kit, then shift out the bottom of DIN-Rail, disassembling ends.

Attention before power on:

- Power ON operation: first connect power line to the connection terminal of device power supply, then power on.
- Power OFF operation: first unpin the power plug, then remove the power line, please note the operation order above.

【Power Supply Connection】

➢ **DC power supply**

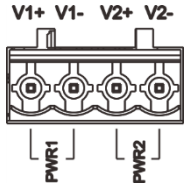

The device provides 4 pins 7.62mm pitch power supply input terminal blocks and two independent DC power supply systems for PWR1 and PWR2. The power supply supports anti-reverse connection. Power supply range: 12～48VDC

【DIP Switch Settings】



The device provides 4 pins DIP switches for function settings, where "ON" is enable valid terminal. Please power off and power on after changing the status of DIP switches. DIP switches definition as follows:

DIP	Definition	Operation
1	Flow control	Set the DIP switch to ON
2	Reserved	-
3	Port isolation	Set the DIP switch to ON, fiber port can communicate with copper port. Copper ports can't communicate with each other.
4	Reserved	-

【Checking LED Indicator】

The function of each LED is described in the table as below:

LED	Status	Description
P1/P2	ON	P1/P2 is running normally
	OFF	P1/P2 is disconnected and running abnormally.
Link/Act (G1-G9)	ON	Ethernet port connection is active.
	Blinking	Data transmitted
	OFF	Ethernet port connection is inactive.

【Specification】

Panel	
Gigabit copper port	10/100/1000Base-T(X), RJ45, automatic flow control, full/half duplex mode, MDI/MDI-X autotunning
Gigabit fiber port	1000Base-FX, optional SC/ST/FC
Indicator	Power indicator, interface indicator
Exchange attributes	
Backplane bandwidth	20G
Packet buffer size	1Mbit
MAC table size	8K
Power supply	
Input power supply	24VDC (12~48VDC) Support dual power supplies redundancy, reverse-connection protection
Access terminal	4 pins 7.62mm pitch terminal blocks
Consumption	
No-load	3.9W@24VDC
Full-load	8.1W@24VDC
Working environment	
Working temperature	0~55℃
Storage temperature	-10~65℃
Working humidity	5%~95% (no condensation)
Protection grade	IP30 (metal shell)