



ECAT-2094S

EtherCAT 4-Axis Stepper Motor Controller/ Driver

Features

- Supports four stepper motors (2-phase bipolar)
- Stepper motors are controlled in an open loop operation
- Programmable coil current level: up to 1.5 A
- Programmable microstep size: maximum 256 microsteps per full step
- Supported motor voltage range: 5 to 46 VDC
- 4 × Encoder interfaces (A, B, Z), differential
- 8 × Digital input. Two DI channels for each axis: reference switch input, latch input
- 2 × Digital output
- Automatic current reduction to reduce heat when motor is not moving
- Drive protection:
  - Over-temperature
  - Under voltage
  - Short circuit
- Optically isolated I/O
- LED indicators for I/O, EtherCAT and motion status
- Internal memory for storing configuration data
- EtherCAT:
  - 2 × RJ-45 bus interface
  - Distance between stations up to 100 m (100BASE-TX)
  - Support daisy chain connection
  - EtherCAT conformance test tool verified
  - Supports Free-Run, SM synchron and Distributed Clock (DC) operation modes
- Removable terminal block connector

Introduction

The ECAT-2094S stepper motor controller is a cost-effective, two-phase bipolar stepper driver. The ECAT-2094S simultaneously controls up to four stepper motors. A motor voltage range between 5 and 46V DC and a maximum motor coil current of 1.5A is being supported. For each motor the maximum running coil current, microstep resolution and other motion parameters are software selectable.

The ECAT-2094S is a standard EtherCAT slave and an EtherCAT master is required to operate the device. The ECAT-2094S supports three operation modes: Free-Run, SM-Synchron and Distributed Clock (DC).

Two-phase bipolar stepper motors can be directly connected to the ECAT-2094S device. The device is designed to operate the stepper motor in an open loop. Configuration has to be done by the EtherCAT master and the application program. Each stepper motor is being independently controlled by a separated driver IC. The four driver ICs are not synchronized and work independently from each other. The driver automatically controls the torque and position of the motor. An integrated ramp generator automatically calculates the acceleration and deceleration distance. In position mode the controller drives the motor to the target position and in velocity mode accelerates the motor to the target velocity. All motion parameters can be changed on the fly.

The ECAT-2094s has four integrated incremental encoder interfaces. Four 32 bit high frequency encoder counter counts the input signal of external incremental encoders. The encoder can for example be used for homing purposes and for consistency checks.

High resolution of up to 256 microsteps per full step is supported for a ensuring smooth and precise motor operation.

For each motor two digital input channels are provided. The digital inputs can be set to act as a simple DI, as a left and right hardware limit switch which automatically stops the motor when activated, or a latch trigger for latching the current motor and encoder position.

The module must be supplied by three power sources. Two motor supply and a 24Vdc control supply. Two motors share one power supply.

☑ Hardware Specifications

Model		Specification
Motor outputs		
Number of Outputs		4 × stepper motor, 2 phases
Output Current		1.5A
Voltage Range of the Motor Output		5 to 46 VDC
Current Controller Frequency		24.5 kHz
Maximum Step Frequency		8.388 MHz
Microsteps Per Step		256, 128, 64, 32, 16, 8, 4, 2
Encoder Inputs		
Number of Encoder Inputs		4 × encoder counter (A, B, Z), differential
Maximum Encoder Pulse Frequency		4 MHz
Digital Inputs		
Number of digital inputs		8 (2 × limit position for each motor)
Wet contact	ON Voltage Level	+19 to 30 VDC
	OFF Voltage Level	+11 VDC MAX
Photo-Isolation		3750 VDC
Digital Output		
Number of Digital Outputs		2
Output Type		Open collector
Load Voltage		+5 to 30 VDC
Max. Load Current		100 mA
Isolation Voltage		3750 VDC
LED Indicators		
Diagnostic LED		Power, EtherCAT status, Digital IO, driving, temperature warning, over-temperature error, phase A and B under-voltage
Communication Interface		
Connector		2 × RJ-45
Protocol		EtherCAT
Distance Between Stations		Max. 100 m (100BASE-TX)
Data Transfer Medium		Ethernet/EtherCAT Cable (Min. CAT 5), Shielded
Power		
Input Voltage Range		20 V ~ 30 VDC
EMS Protection		
ESD (IEC 61000-4-2)		4 KV Contact for each channel
EFT (IEC 61000-4-4)		Signal: 1 KV Class A; Power: 1 KV Class A
Surge (IEC 61000-4-5)		1 KV Class A
Mechanism		
Installation		DIN-Rail
Dimensions (L × W × H) [mm]		181 × 110 × 33 (without connectors)
Case Material		Metal
Environment		
Operating Temperature		-25 ~ +40°C
Storage Temperature		-30 ~ +80°C
Relative Humidity		10 ~ 90% RH, Non-condensing

Table 1: Technical data

Dimensions (Units: mm)

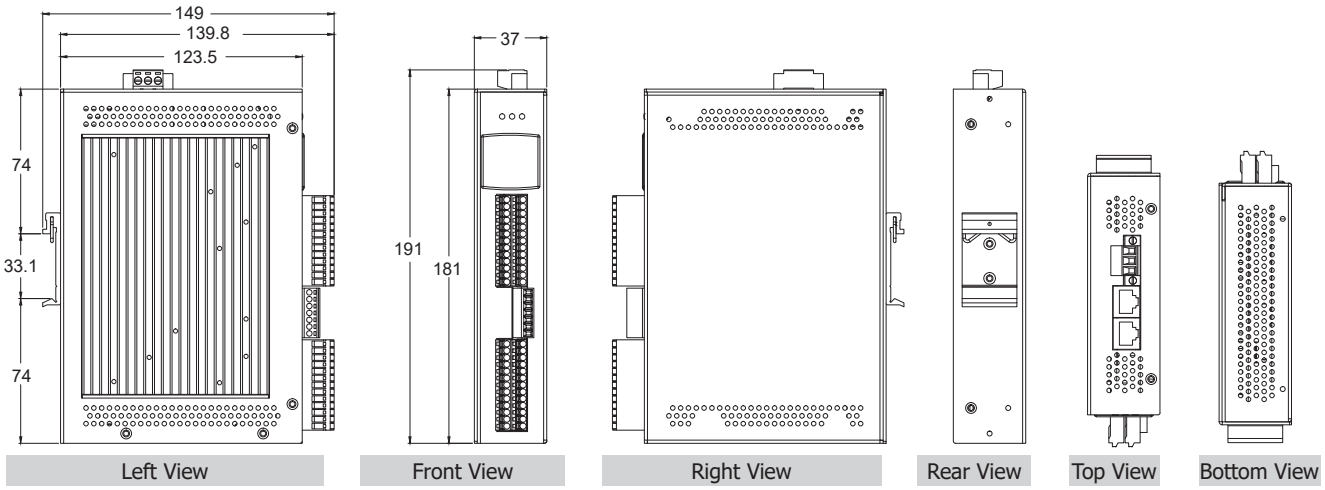

Figure 1: Dimensions of the ECAT-2094S

Pin Assignments

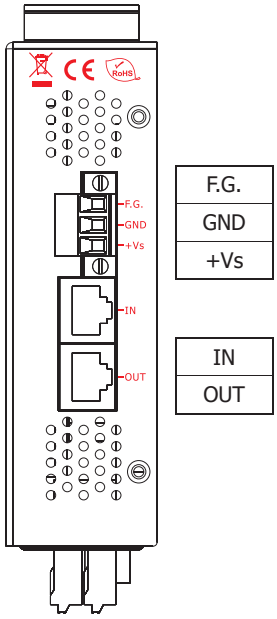

Figure 2: ECAT-2094S side view with power supply and EtherCAT connection

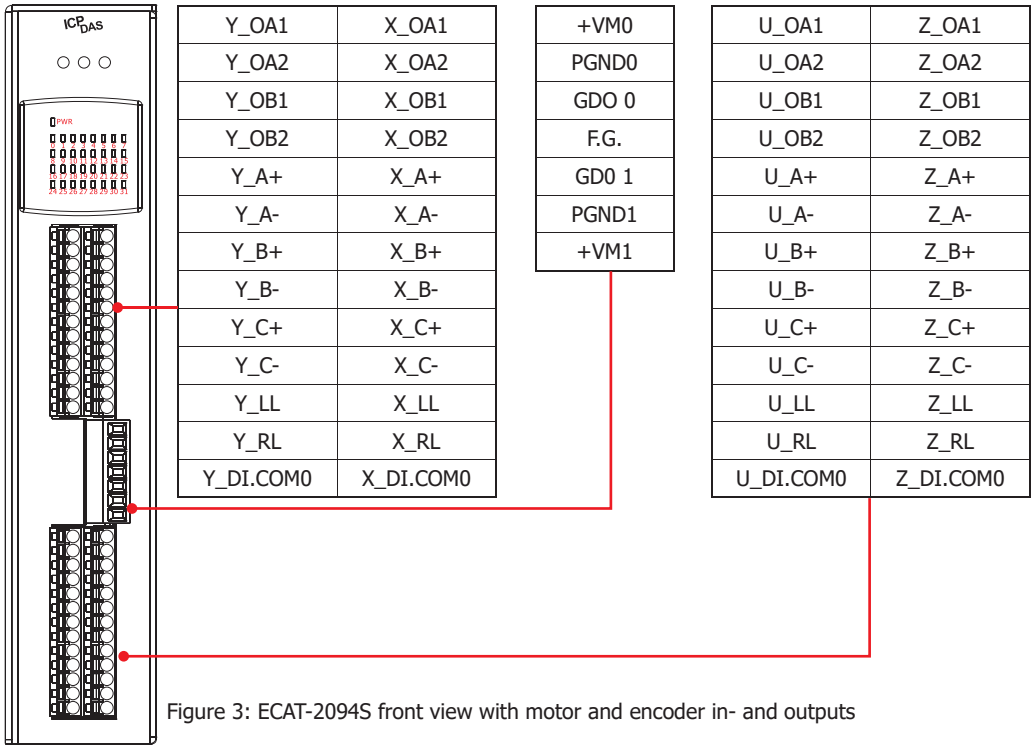

Y_OA1	X_OA1
Y_OA2	X_OA2
Y_OB1	X_OB1
Y_OB2	X_OB2
Y_A+	X_A+
Y_A-	X_A-
Y_B+	X_B+
Y_B-	X_B-
Y_C+	X_C+
Y_C-	X_C-
Y_LL	X_LL
Y_RL	X_RL
Y_DI.COM0	X_DI.COM0

+VM0
PGND0
GDO 0
F.G.
GD0 1
PGND1
+VM1

U_OA1	Z_OA1
U_OA2	Z_OA2
U_OB1	Z_OB1
U_OB2	Z_OB2
U_A+	Z_A+
U_A-	Z_A-
U_B+	Z_B+
U_B-	Z_B-
U_C+	Z_C+
U_C-	Z_C-
U_LL	Z_LL
U_RL	Z_RL
U_DI.COM0	Z_DI.COM0

Figure 3: ECAT-2094S front view with motor and encoder in- and outputs

Wire connection

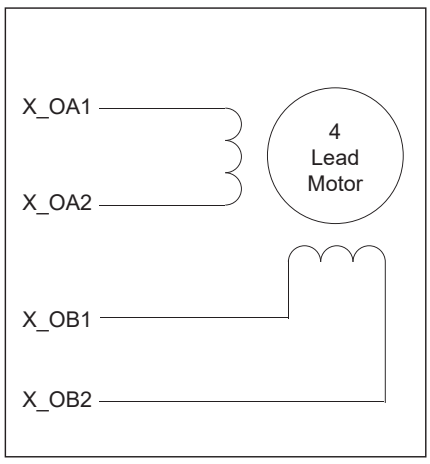

Figure 4: Four lead bipolar motor connection

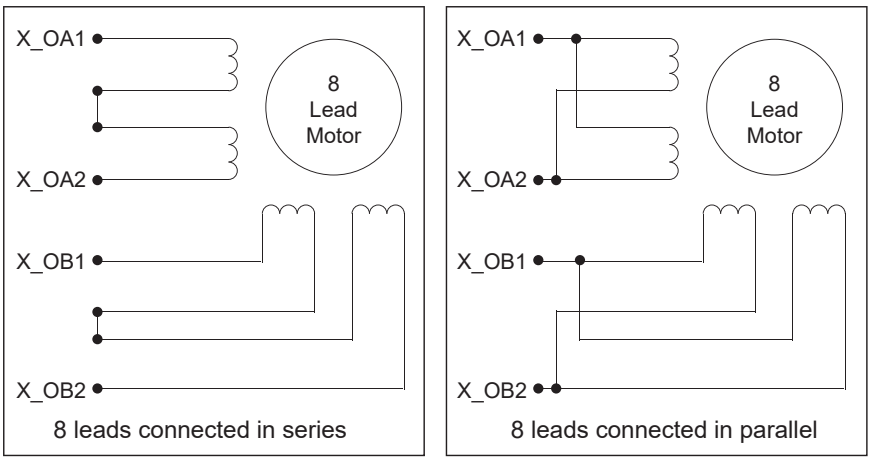

Figure 5: Eight lead bipolar motor connection (left: series, right: parallel)

☑ Wire Connections

Digital Input Channel

Digital Input	Readback as 1	Readback as 0
Sink	+10 ~ +24 VDC	OPEN or <4 VDC
	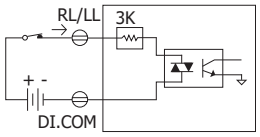	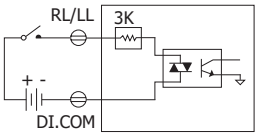
Source	+10 ~ +24 VDC	OPEN or <4 VDC
	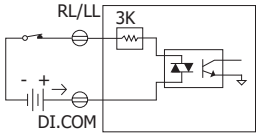	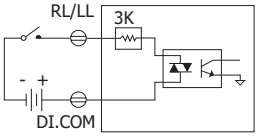

Figure 6: Digital inputs RL and LL

Digital Output Channel

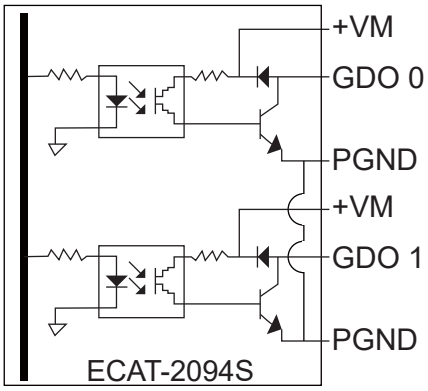

Figure 7: General purpose DO block diagram

Output Type	ON State Readback as 1	OFF State Readback as 0
Drive Relay	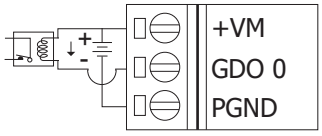	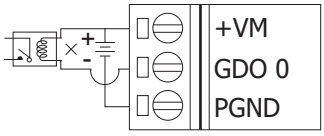
Resistance Load	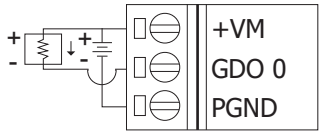	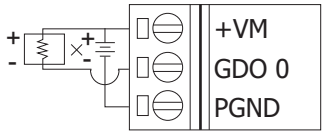

Figure 8: General purpose DO channel

☑ Application Example

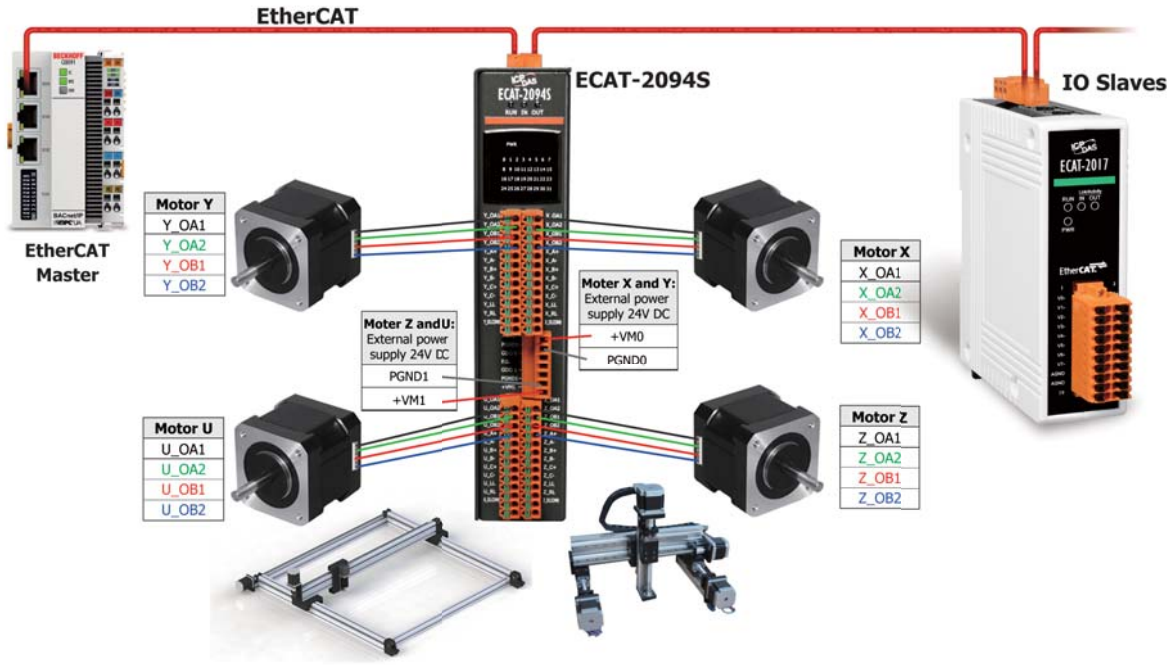

☑ Ordering Information

ECAT-2094S CR	EtherCAT slave 4-axis stepper motor controller/ driver