

ECAT-2050

EtherCAT Slave I/O Module with Isolated 4-ch Source or Sink type Digital Outputs and 13-ch Digital Inputs (RoHS)

Features

- On the fly processing: EtherCAT
- Powerful MCU handles efficient network traffic
- 2 x RJ-45 bus interface
- Distance between stations up to 100 m (100 BASE-TX)
- Support daisy chain connection
- EtherCAT conformance test tool verified
- Removable terminal block connector
- LED indicators for the input status
- Built-In isolated 4-ch source or sink type digital outputs and 13-ch digital inputs
- RoHS compliant
- ESD Protection 4 KV Contact for each channel

Introduction

The ECAT-2050 is an industrial slave I/O module built in 4 source or sink type digital outputs and 13 digital inputs It is equipped with the EtherCAT* protocol and installed by daisy chain connection that provides a more scalable system with fewer wires. Users can obtain the input and output status not only via the process data but also from its LED indicators. The ECAT-2050 has passed and verified by the conformance test tool, therefore eligible EtherCAT Master or configurator can manipulate it simply and implement your various applications easily.

* EtherCAT® is registered trademark and patented technology, licensed by Beckhoff Automation GmbH, Germany.

Hardware Specifications

Model		ECAT-2050
Digital Input		
Channels		13
Input Type		Wet (Sink/Source)
Wet Contact	ON Voltage Level	+10 V ~ +50 V
	OFF Voltage Level	+4 V Max.
Photo-Isolation		3750 VDC
Digital Output		
Channels		4
Output Type		Open Collector (Sink) / Open Emitter (Source) (Jumper Selectable)
Load Voltage		+3.5 ~ 30 V
Max. Load Current		100 mA per channel
Isolation Voltage		3750 VDC
Communication Interface		
Connector		2 x RJ-45
Protocol		EtherCAT
Distance between Stations		Max. 100 m (100 BASE-TX)
Data Transfer Medium		Ethernet/EtherCAT Cable (Min. CAT 5), Shielded
EMS Protection		
ESD (IEC 61000-4-2)		±4 kV Contact for Each Terminal
EFT (IEC 61000-4-4)		Signal: 1 KV Class A; Power: 1 KV Class A
Surge (IEC 61000-4-5)		1 KV Class A
Power		
Input Voltage Range		10 ~ 30 VDC
Power Consumption		4.5 W Max.
Mechanical		
Dimensions (H x W x D)		110 mm x 90 mm x 33 mm
Installation		DIN-Rail Mounting
Case Material		UL 94V-0 Housing
Environment		
Operating Temperature		-25 ~ +75°C
Storage Temperature		-30 ~ +80°C
Relative Humidity		10 ~ 90% RH, Non-condensing

Applications

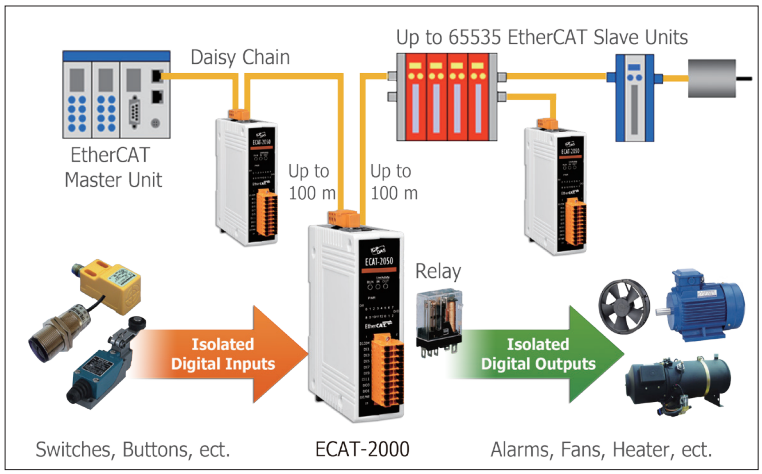

Pin Assignments

1
DI.COM
DI1
DI3
DI5
DI7
DI9
DI11
DO3
DO1
EXT.PWR
19

Wire Connections

Digital Input /Counter	Readback as 1	Readback as 0
Sink	+10 ~ +50 VDC	OPEN or <4 VDC
Source	+10 ~ +50 VDC	OPEN or <4 VDC

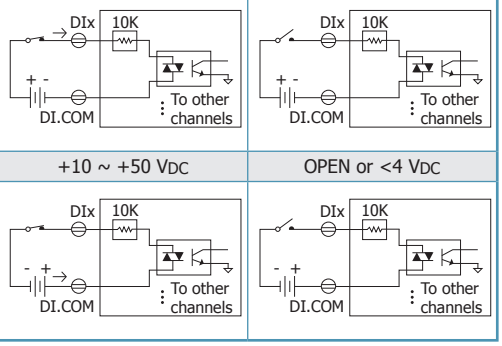

Open Collector (Sink)

Output Type	ON State Readback as 1	OFF State Readback as 0	Jumper Selectable
Drive Relay	EXT.PWR DOx EXT.GND	EXT.PWR DOx EXT.GND	JP2~JP5
Resis-tance Load	EXT.PWR DOx EXT.GND	EXT.PWR DOx EXT.GND	

Open Emitter (Source)

Output Type	ON State Readback as 1	OFF State Readback as 0	Jumper Selectable
Inductive Load	DOx Ext.PWR Ext.GND	DOx Ext.PWR Ext.GND	JP2~JP5
Resistance Load	Load DOx Ext.PWR Ext.GND	Load DOx Ext.PWR Ext.GND	

Dimensions (Units: mm)

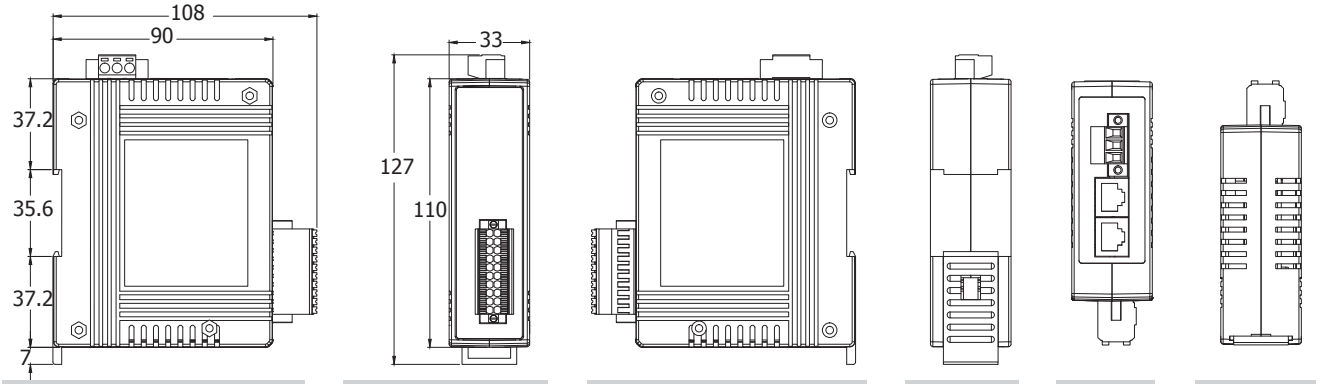

Left Side View | Front View | Right Side View | Rear View | Top View | Bottom View

Ordering Information

ECAT-2050 CR	EtherCAT Slave I/O Module with Isolated 4-ch Source or Sink type Digital Outputs and 13-ch Digital Inputs (RoHS)