3onedata
Make network communication more reliable

IES206 Series Unmanaged Industrial Ethernet Switch Quick Installation Guide

3onedata Co., Ltd.

Address: 3/B, Zone 1, Baiwangxin High Technology Industrial Park, Xili, Nanshan District, Shenzhen

Website: www.3onedata.com

Tel: +86 0755-26702688

Fax: +86 0755-26703485

【Package Checklist】

Please check whether the package and accessories are intact while using the switch for the first time.

1. Industrial Ethernet switch
2. Certification
3. Quick installation guide
4. Warranty card
5. DIN-Rail mounting attachment

If any of these items are damaged or lost, please contact our company or dealers, we will solve it ASAP.

【Product Overview】

The series products are unmanaged industrial Ethernet switch. Models as follows:

Model I. IES206-2GF-2P (12~48VDC) (2 Gigabit Fiber Ports + 4 100M Copper Ports, 12~48VDC Dual Power Supply)

Model II. IES206-2GF-P (220VAC) (2 Gigabit Fiber Ports + 4 100M Copper Ports, 100~240VAC)

Model III. IES206-2GS (2 Gigabit SFP Slots + 4 100M Copper ports, 12~48VDC Dual Power Supply)

【Panel Design】

➢ **Model I: Top view, Bottom view and Rear view**

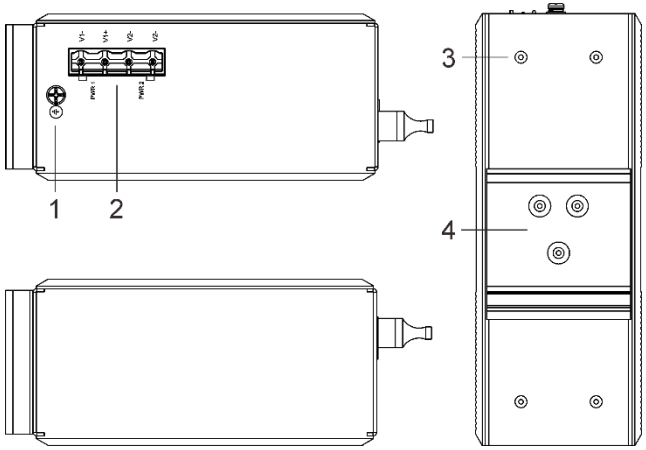

➢ **Model I: Front view and Side view**

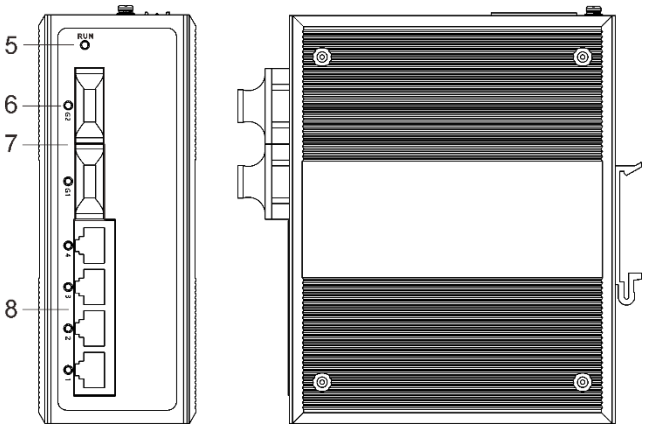

1. Grounding screw
2. DC power input terminal block
3. Location hole for wall mounting
4. DIN-Rail mounting kit
5. Device running indicator RUN
6. Ethernet port status indicator
7. 1000Base-FX Gigabit Ethernet fiber port
8. 10/100Base-T(X) 100M Ethernet copper port

➢ **Model II: Top view, Bottom view and Rear view**

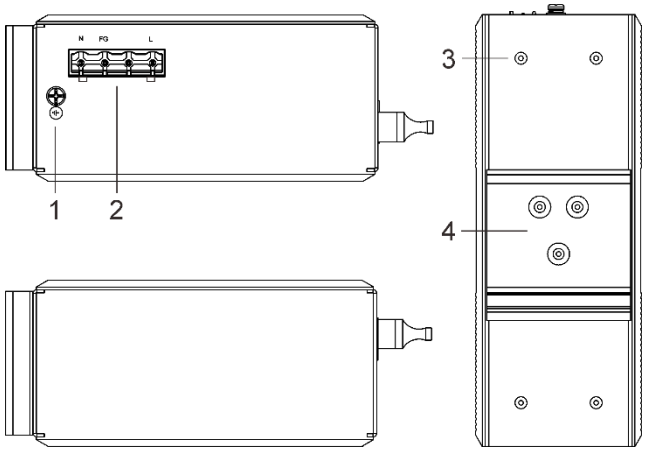

➢ **Model II: Front view and Side view**

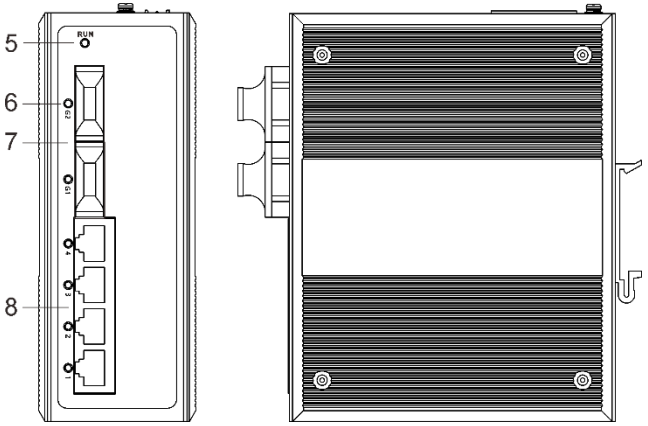

1. Grounding screw
2. AC power input terminal block
3. Location hole for wall mounting
4. DIN-Rail mounting kit
5. Device running indicator RUN
6. Ethernet port status indicator
7. 1000Base-FX Gigabit Ethernet fiber port
8. 10/100Base-T(X) 100M Ethernet copper port

➢ **Model III: Top view, Bottom view and Rear view**

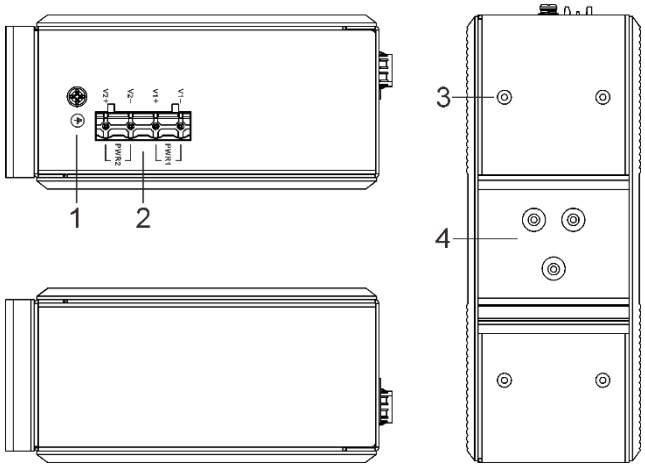

➢ **Model III: Front view and Side view**

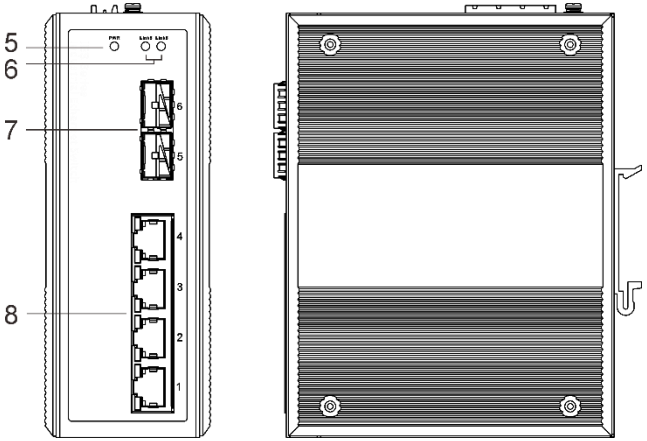

1. Grounding screw
2. DC power input terminal block
3. Location hole for wall mounting
4. DIN-Rail mounting kit
5. Device power status indicator PWR
6. Gigabit Ethernet SFP port status indicator
7. 1000Base-SFP Gigabit Ethernet SFP slot
8. 10/100Base-T(X) 100M Ethernet copper port with indicator

【Mounting Dimension】

Unit: mm

➢ **Model I and Model II**

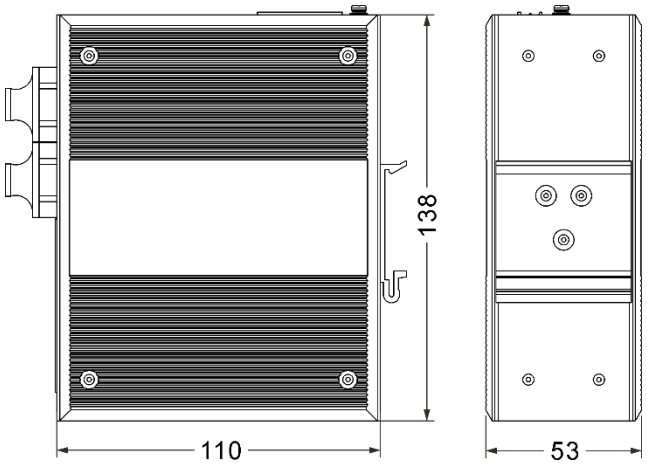

➢ **Model III**

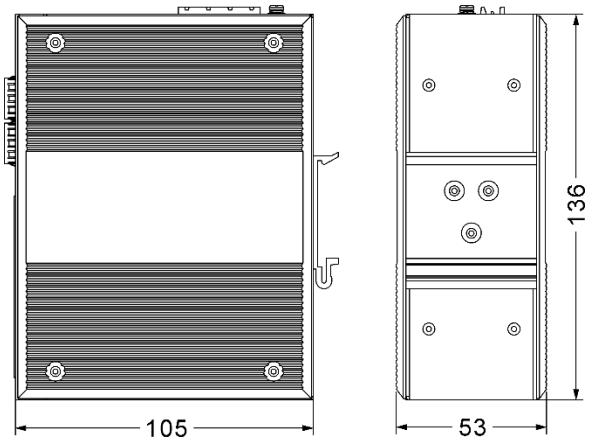

Attention before mounting:

- Don't place or install the device in area near water or moist, keep the relative humidity of the device surrounding between 5%~95% without condensation.
- Before power on, first confirm the supported power supply specification to avoid over-voltage damaging the device.
- The device surface temperature is high after running; please don't directly contact to avoid scalding.

【DIN-Rail Mounting】

For convenient usage in industrial environments, the product adopts 35mm DIN-Rail mounting, mounting steps as below:

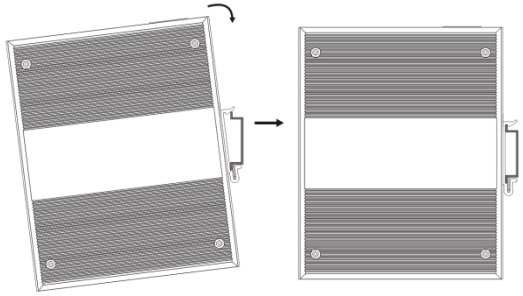

Step 1 Check whether the DIN-Rail mounting kit that comes with the device is installed firmly.

Step 2 Insert the bottom of DIN-Rail mounting kit (one side with spring support) into DIN-Rail, and then insert the top into DIN-Rail.

Tips:

Insert a little to the bottom, lift upward and then insert to the top.

Step 3 Check and confirm the product is firmly installed on DIN-Rail, and then mounting ends.

【Disassembling DIN-Rail】

Step 1 Power off the device.

Step 2 After lift the device upward slightly, first shift out the top of DIN-Rail mounting kit, and then shift out the bottom of DIN-Rail, disassembling ends.

Attention before powering on:

- Power ON operation: first connect power line to the connection terminal of device power supply, and then power on.
- Power OFF operation: first unpin the power plug, and then remove the power line, please note the operation order above.

【Power Supply Connection】

➢ **Model I: DC power supply**

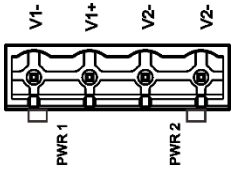

The Model I provides 4 pins power supply input terminal blocks and two independent DC power supply systems of PWR1 and PWR2. The power supply supports nonpolarity and anti-reverse connection. It can normally operate after reverse connection. Power supply range: 12～48VDC

- **Model II: AC power supply**

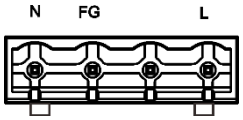

The Model II provides 4 pins power supply input terminal blocks and 1 AC power supply system. Power supply range: 100～240VAC

- **Model III: DC power supply**

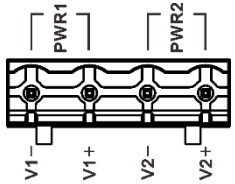

The Model III provides 4 pins power supply input terminal blocks and two independent DC power supply systems of PWR1 and PWR2. The power supply supports nonpolarity and anti-reverse connection. It can normally operate after reverse connection. Power supply range: 12～48VDC

【Checking LED Indicator】

This device provides LED indicators to monitor device's operating states, which has simplified the process of troubleshooting comprehensively. The detailed status of each LED is described in the table as below:

- **Model I and Model II**

LED	Status	Description
RUN	ON	The device is powered on or in abnormal condition
	OFF	The device is not powered on or in abnormal condition
	Blinking	Blink once per second, the device is running normally
Link/Act (1-4/G1-G2)	ON	The Ethernet port has established valid network connection
	Blinking	The Ethernet port is in an active network status
	OFF	The Ethernet port has not established valid network connection

- **Model III**

LED		Status	Description
PWR		ON	PWR is connected and running normally
		OFF	PWR is disconnected and running abnormally.
Link5-Link6		ON	The Port 5-6 has established valid network connection
		Blinking	The Port 5-6 is in an active network status
		OFF	The Port 5-6 has not established valid network connection
RJ45 LED (1-4)	10/100M	ON	The Port 1-4 is in 100M operating mode
		OFF	The Port 1-4 is in 10M operating mode
	Link/ ACT	ON	The Port 1-4 has established valid network connection
		Blinking	The Port 1-4 is in an active network status
		OFF	The Port 1-4 has not established valid network connection

【Specification】

Panel	
Gigabit fiber port	1000Base-FX, optional SC/ST/FC
Gigabit SFP	1000Base-SFP, SFP slot
100M copper port	10/100Base-T(X), self-adaptive RJ45 port, self-adaptive full/half duplex, support MDI/MDI-X self-adaption
Indicator	Power indicator, running indicator, interface indicator
Switch property	
Backplane bandwidth	7.6G
Packet buffer size	1Mbit
MAC address table	8K
Power supply	
Input power supply	➢ DC dual power supply device Power supply range: 12~48VDC Power protection: dual power redundancy backup, anti-reverse connection ➢ AC single power supply device Power supply range: 100~240VAC
Access terminal	4-core 7.62mm pitch terminal block
Consumption	
Model I	No-load: 3.8W@24VDC Full-load: 5.5W@24VDC
Model II	No-load: 4.4W@220VAC Full-load: 5.6W@220VAC
Model III	No-load: 5.9W@24VDC Full-load: 7.3W@24VDC
Environmental Limits	
Working temperature	-40～75℃
Storage temperature	-40～85℃
Working humidity	5%～95% (no condensation)
Protection grade	IP40 (metal shell)